OPERATIONS START-UP GUIDE

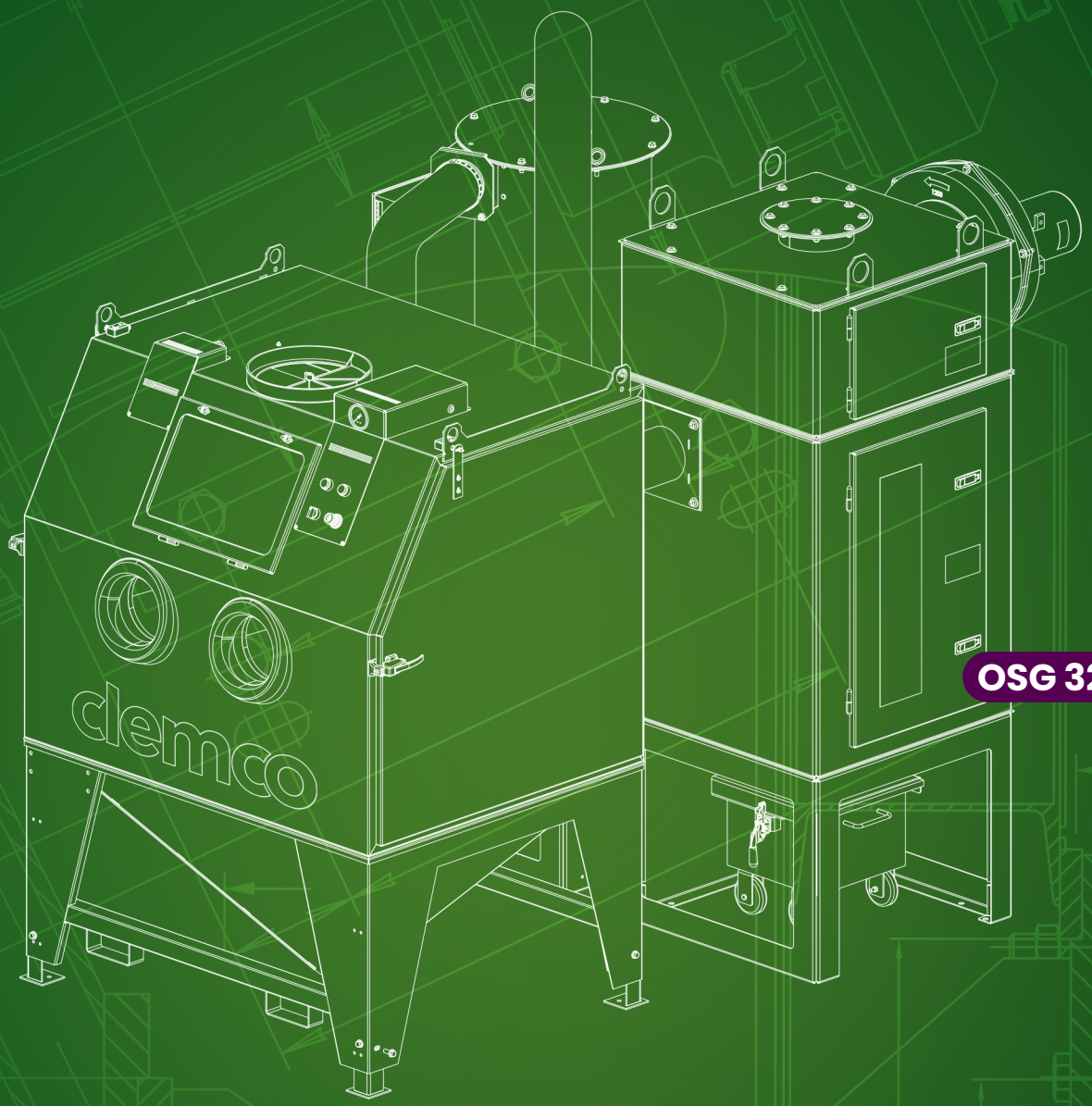

OSG 32541

clemco

Industrial Cabinet Series Blast Systems

Date of Issue: 04/26 | Rev. Ø

NOTICE

Notice to purchasers and users of our products and this informational material

Clemco proudly provides products for the abrasive blast industry and is confident that industry professionals will use their knowledge and expertise for the safe and efficient use of these products.

The products described in this material and the information relating to these products are intended for knowledgeable, experienced users. It is the responsibility of the user to insure that proper training of operators has been performed and a safe work environment is provided.

No representation is intended or made as to: the suitability of the products described here for any purpose or application, or to the efficiency, production rate, or useful life of these products. All estimates regarding production rates or finishes are the responsibility of the user and must be derived solely from the user's experience and expertise, not from information contained in this material.

It is possible that the products described in this material may be combined with other products by the user for purposes determined solely by the user. No representations are intended or made as to the suitability of, or engineering balance of, or compliance with regulations or standard practice of any such combination of products or components the user may employ.

This equipment is only one component of a cabinet blasting operation. Other products, such as air compressors, air filters and receivers, abrasives, equipment for ventilating, dehumidifying, or other equipment, even if offered by Clemco, may have been manufactured or supplied by others. The information Clemco provides is intended to support the products Clemco manufactures. Users must contact each manufacturer and supplier of products used in the blast operation for warnings, information, training, and instruction relating to the proper and safe use of their equipment.

clemco

©2026 Clemco Industries Corp.
One Cablecar Drive • Washington MO 63090 • Phone: 636.239.4300
customerservice@clemcoindustries.com • www.clemcoindustries.com
ALL RIGHTS RESERVED

Table of Contents

1.0 Introduction ..... page 4
Scope of Manual 1.1
General Description 1.2
Theory of Operation 1.3
Blast Machine and Controls 1.4
Electrical Requirements 1.5

2.0 Installation ..... page 5
General Installation Notes 2.1
Connect Conveying (flex) Hose 2.2
Connect Compressed-Air Supply Lines – Suction 2.3
Connect Compressed-Air Supply Lines – Pressure 2.4
Ground the Cabinet and Dust Collector 2.5
Connect Electrical Service 2.6
Connect Media and Air Hose – Suction 2.7
Connect Media Blast Hose – Pressure 2.8
Final Assembly 2.9

3.0 Field Installed Accessories ..... page 10

4.0 Operation ..... page 10
Media Loading 4.1
Media Unloading 4.2
Loading and Unloading Parts 4.3
Blasting Operation 4.4
Blasting Technique 4.5
Stop Blasting 4.6
Shutdown 4.7

5.0 Adjustments ..... page 12

6.0 Troubleshooting ..... page 12

7.0 Component Manuals ..... page 12
Series Cabinet, Basic – Component Manual 7.1
Series Cabinet, PLC – Component Manual 7.2
EDC Collector Component Manual 7.3
LPDC Collector Component Manual 7.4
RPH Collector Component Manual 7.5
Reclaim, Suction – Component Manual 7.6
Reclaim, Pressure – Component Manual 7.7

Safety Alerts Key

This is the safety alert symbol. It is used to alert you to potential physical injury hazards. Obey all safety messages that follow this symbol to avoid possible injury or death.

NOTICE

Notice indicates information that is considered important, but not hazard-related, if not avoided, could result in property damage.

CAUTION

Caution indicates a hazardous situation that, if not avoided, could result in minor or moderate injury.

WARNING

DANGER

Warning and Danger, indicates a hazardous situation that, if not avoided, will result in death or serious injury.

1.0 INTRODUCTION

1.1 | Scope of Manual

1.1.1 | These instructions cover setup, operation, and troubleshooting for the Series Blast Cabinets. Accessory manuals cover specific troubleshooting, accessories, and replacement parts for the cabinet, reclaim system, and dust collector.

1.1.2 | The instructions contain important information required for safe operation of the cabinet. Before using this equipment, all personnel associated with the blast cabinet operation must read this entire manual and all accessory manuals to become familiar with their operation, parts, and terminology.

1.2 | General Description

1.2.1 | Series blast cabinets enclose the blasting environment to provide efficient blasting while maintaining a clean surrounding work area. Production rates are influenced by size of nozzle, compressor output, working pressure, type and size of media, and angle and distance of the nozzle from the blast surface. Series cabinets consist of three major modules:

- **Cabinet Enclosure**
- **Reclaimer Stans**
- **Dust Collector**

1.2.2 | Refer to **Figure 1** for the general arrangement of blast cabinet system components. This illustration is intended to show overall equipment layout only and should not be used as a detailed assembly reference. Actual configuration and appearance of individual modules may vary from what is shown in **Figure 1**.

1.3 | Theory of Operation

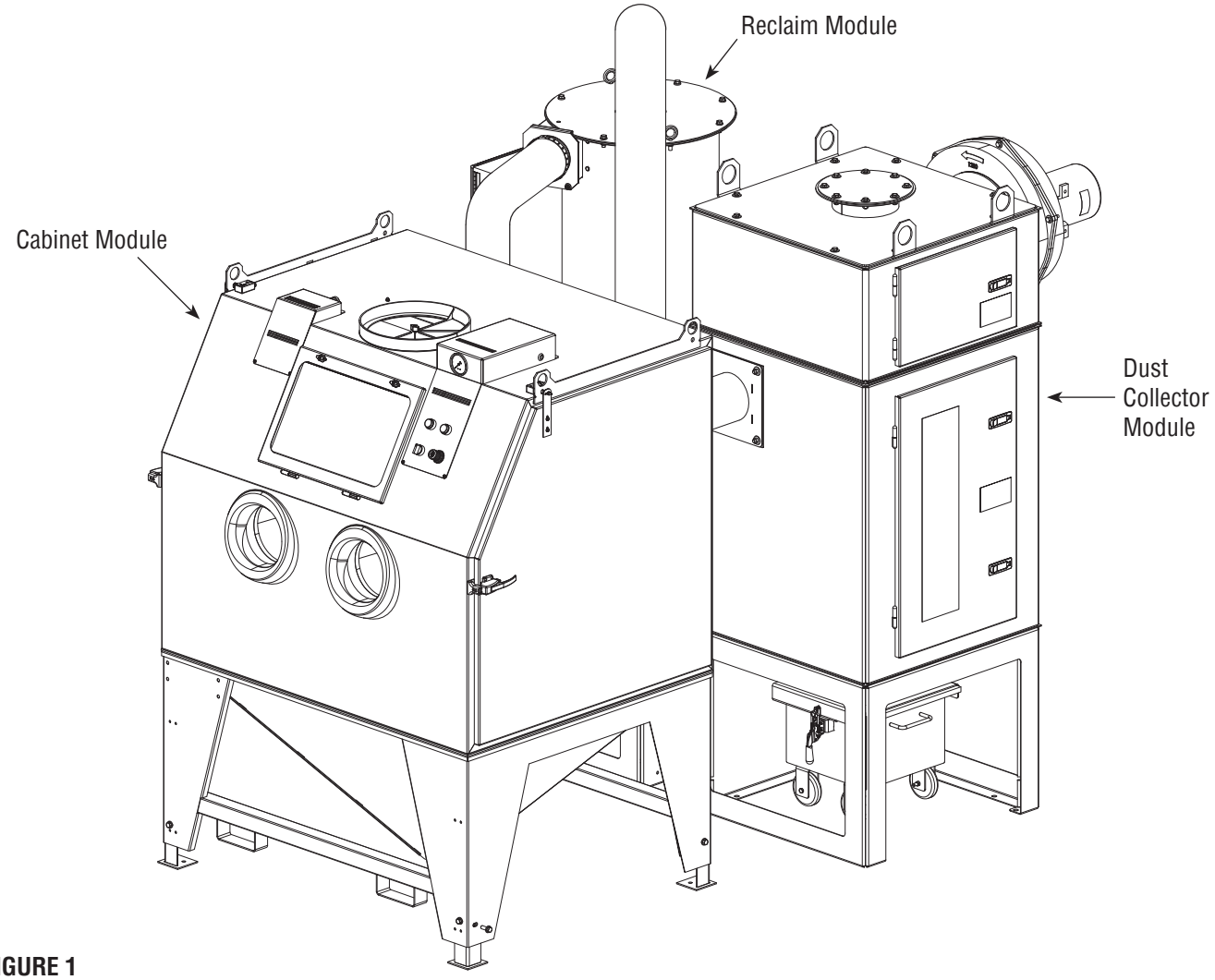

FIGURE 1

1.3.1 | Suction Blasting: Pressing the foot pedal initiates airflow through the blast gun, creating a vacuum that draws media into the mixing chamber and propels it through the nozzle. Spent media and debris fall into the hopper and are conveyed to the reclaimer. Releasing the pedal stops blasting.

1.3.2 | Pressure Blasting: Pressing the foot pedal pressurizes the blast machine and drives media through the hose and nozzle. Spent media and debris fall into the hopper and are conveyed to the reclaimer. Releasing the pedal depressurizes the system and stops blasting. The reclaimer automatically refills the blast machine after pressure equalizes.

1.3.3 | Media recovery and separation: Recovered media enters the reclaimer, where dust and fines are removed to the dust collector. Oversized particles are screened out, and reusable media returns to the hopper.

1.3.4 | Dust filtering: Dust collector filters remove fines from the air-stream and discharge clean air.

1.4 | Blast Machine and Controls – Pressure Cabinet Systems

1.4.1 | Clemco certifies that its blast machines (pressure vessels) conform to the ASME (American Society of Mechanical Engineers) Boiler and Pressure Vessel Code, Section VIII, Division 1. It is the owner's responsibility to maintain the integrity of the vessel in accordance with state regulations. Regulations may include regular inspection and hydrostatic testing as described in National Board inspection code and jurisdictional regulations and/or laws.

⚠ WARNING

Welding, grinding, or drilling on the blast machine can weaken the vessel. Compressed-air pressure can cause a weakened blast machine to rupture, resulting in death or serious injury. Welding, grinding, or drilling on the vessel without a National Board R stamp voids the Clemco ASME certification.

1.4.2 | All welding repairs to the vessel must be performed by certified welders at shops holding a National Board R stamp. Welding performed by any welder not properly qualified per the ASME code voids the Clemco ASME certification.

1.4.3 | Do not exceed the maximum working pressure rating (PSI) of the blast machine. The maximum pressure rating is stamped into the ASME nameplate, which is welded to the side of the vessel.

⚠ WARNING

Excessive compressed-air pressure can cause a blast machine to rupture. To prevent serious injury or death, do not exceed the rated pressure of the blast machine.

1.4.4 | OSHA does not require pressure-relief valves on blast machines when air compressors supplying air to the blast machines are built to American Society of Mechanical Engineers Boiler and Pressure Vessel Code, Section VIII, Division 1 and comply with OSHA regulation 29 CFR 1910.169, which refers to the ASME code when describing the necessity of pressure-relief valves on compressed-air equipment. DO NOT operate blast machines with air compressors that are not equipped with properly functioning pressure-relief valves with maximum pressure less than or equal to the maximum-allowable working pressure (MAWP) stamped on the vessel nameplate.

1.4.5 | Pressing the foot pedal opens the inlet regulator and closes the outlet valve, pressurizing the system and starting blasting. Releasing the pedal depressurizes the system and stops blasting.

⚠ WARNING

All dust is hazardous to breathe. Emissions can occur from the dust collection system. Identify all materials that are to be removed by blasting; if any toxic materials such as lead dust or dust from other heavy metals and corrosives, or any other toxic materials are being removed, use a HEPA afterfilter to assist in maintaining inhalation hazards below the permissible exposure limits (PELs). Prolonged exposure to any dust can result in serious lung disease and death. Short-term ingestion of toxic materials can cause serious respiratory injury or death. Filtration may not be adequate in reducing all inhalation hazards. It remains the employer's or user's responsibility to ensure all emissions are safe to breathe.

1.5 | Electrical Requirements

All wiring external of the cabinet is provided by the user to comply with local electrical codes.

1.5.1 | Electrical requirements depend on the size and phase of the dust-collector exhauster motor. NOTE: Full-load amps (FLA) shown below are for the motor only; the lights draw less than one amp. Standard cabinets are supplied as follows:

- 300 cfm: 1/2 HP, 120/208/230V, 1 PH, 60 HZ 120, FLA 120/7, 208/3.4, 230/3.5.
- 600 cfm: 1 HP, 120/230V, 1 PH, 60 HZ 120, FLA 120/12, 208/6.6, 230/6.2.
- 900 cfm: 2 HP, 208/230/460V, 3 PH, 60 HZ Supplied with 230-volt control panel unless 460-volt is specified at the time the order is placed. FLA 208/5.5, 230/5.6, 460/2.8.

2.0 INSTALLATION

Unless noted otherwise, the sequence of assembly in Sections 2.2 through 2.8 may be done in any order that is convenient for the installer.

2.1 | General Installation Notes

2.1.1 | Refer to **Figure 1** for general arrangement. Locate components near compressed air and electrical service. Installation must comply with OSHA and local codes. Allow access to all doors and service points, clearance for dust collector maintenance and dust removal, and space for handling large parts. Position freestanding reclaimers directly behind the cabinet with flex hoses and metering valve facing the cabinet to minimize hose bends and wear. Finalize component placement before making air, electrical, or hose connections.

2.1.2 | Refer to the dust collector manual for setup.

2.2 | Connect Conveying (flex) Hose

2.2.1 |

- Connect small-diameter hose: cabinet hopper > reclaimer inlet
- Connect large-diameter hose: reclaimer outlet > dust collector inlet

For easier installation and sealing, remove 2–3 inches of internal wire at hose ends (do not damage hose). Secure with provided worm clamps. **NOTE:** Hose wire dissipates static electricity and must contact metal at each connection.

2.3 | Connect Compressed-Air-Supply Lines – Suction Systems

A separate air line is required for the dust collector pulse. Refer to the dust-collector owner's manual. The line may be

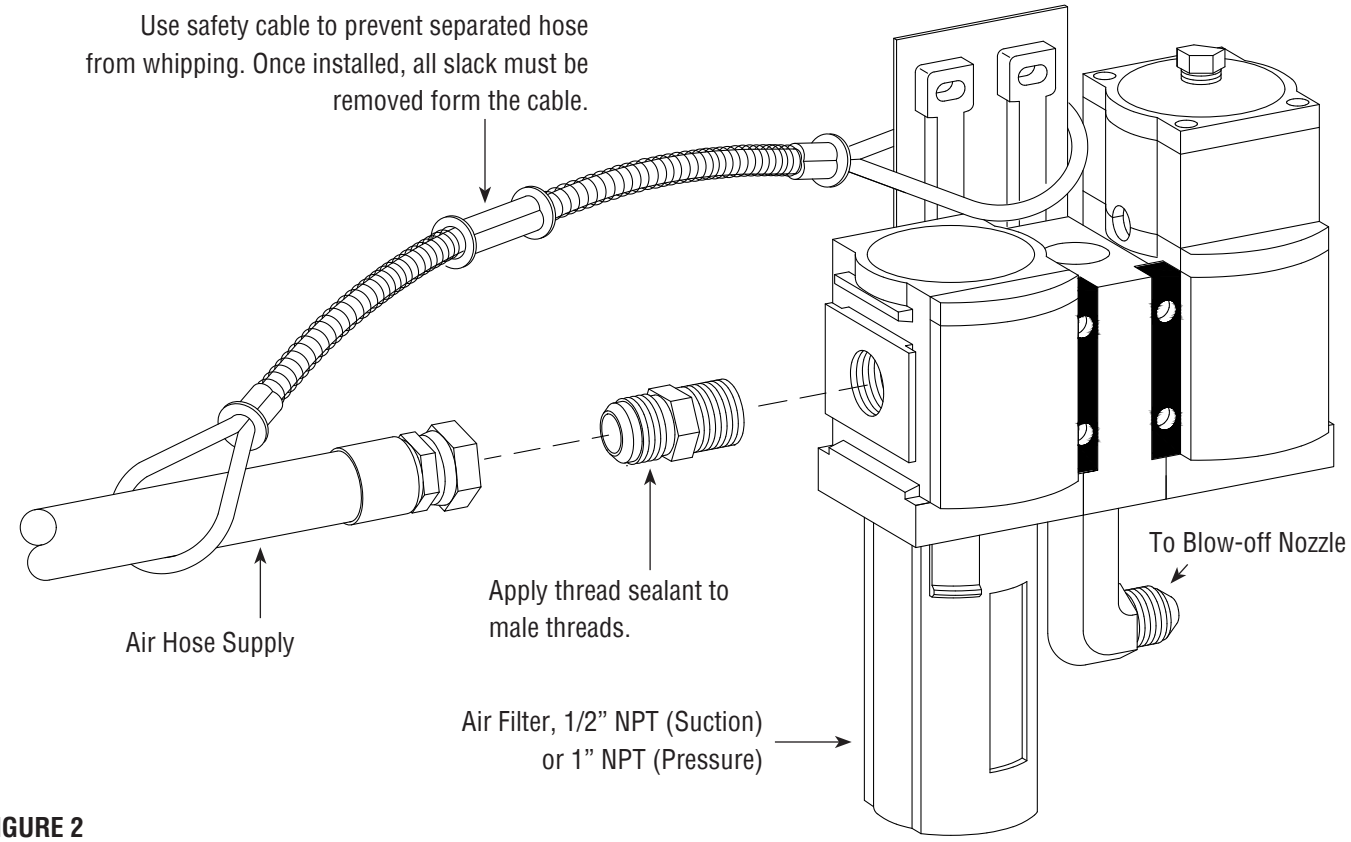

FIGURE 2

connected to the auxiliary-air port on the reclaim plumbing, as shown in **Figure 2**.

⚠ WARNING

Failure to observe the following before connecting the equipment to the compressed-air source can cause serious injury from the sudden release of trapped compressed air:
- **Lockout and tagout the compressed-air supply.**
- **Bleed the compressed-air supply line.**

⚠ WARNING

To avoid the risk of injury from compressed air, install an isolation valve and bleed-off valve where the air supply is tapped into the compressed-air system. This enables a lockout and tagout procedure and depressurization of the compressed-air line before performing maintenance.

2.3.1 | Apply thread sealant and install a compatible fitting to the 1/2-NPT air filter under the hopper (**Figure 2**).

2.3.2 | Use at least minimum air line ID per **Figures 3** (Suction) or **4** (Pressure). Smaller hose reduces performance.

Minimum Compressed-Air Line ID

FIGURE 3	Jet Size		
Air Line Length	1/8” No. 4	5/32” No. 5	3/16” No. 6
25 feet	3/4”	3/4”	1”
50 feet	3/4”	3/4”	1”
75 feet	3/4”	1”	1”
100 feet	3/4”	1”	1”

Compressed-Air Consumption (cfm)*

FIGURE 4	Air Pressure (PSI)			
Nozzle Size	50	60	70	80
1/8 inch	11	13	15	17
3/16 inch	26	30	33	38
1/4 inch	47	54	61	68

*Figures are approximate and for reference only, and may vary for different working conditions. Several variables, including media flow and nozzle wear affect cfm consumption.

2.3.3 | Connect the air line from the air source to the air-filter inlet.

⚠ WARNING

Hose disconnection while under pressure can cause serious injury or death. Use safety lock pins or safety wire to lock twist-on couplings together and prevent accidental separation, and also use safety cables to prevent hose from whipping should separation occur. Safety lock pins and safety cables are listed in Reclaim Component Manual.

2.3.4 | Refer to the dust-collector owner’s manual and connect a compressed-air line to the pulse manifold.

2.4 | Connect Compressed-Air Supply Line(s) – Pressure Systems

A separate air line is required for the dust-collector pulse. Refer to the dust-collector operations manual.

⚠ WARNING

Failure to observe the following before connecting the equipment to the compressed-air source can cause serious injury or death from the sudden release of compressed air:
- **Lockout and tagout the compressed-air supply.**
- **Bleed the compressed-air supply line.**

2.4.1 | Apply thread sealant to the male threads of an air fitting that is compatible with the air-supply hose fitting, and install it onto the 1”-NPT air filter located at the blast machine inlet, as shown in **Figure 2**. Note that the style of connection shown in **Figure 2** is for reference only.

⚠ WARNING

Hose disconnection while under pressure can cause serious injury or death. Use safety lock-pins or safety wire to lock twist-on claw type couplings together and prevent accidental separation, and safety cables to prevent hose from whipping should separation occur. Safety lock pins and safety cables are listed in Reclaim Component Module.

2.4.2 | Install an isolation valve at the air source to enable depressurization for service, and connect a 1" ID or larger air line from the air source to the air filter on the blast machine. A smaller diameter hose may reduce blasting efficiency.

⚠ WARNING

To avoid the risk of injury from compressed air, install an isolation valve and bleed-off valve where the air supply is tapped into the compressed-air system. This enables depressurization of the compressed-air lines before performing maintenance.

2.4.3 | Refer to the dust-collector operations manual and connect a compressed-air line to the pulse manifold.

2.5 | Ground the Cabinet and Dust Collector

2.5.1 | Connect an external ground wire from earth ground to the cabinet grounding lug. Ground the dust collector per its manual.

2.6 | Connect Electrical Service

⚠ WARNING

Shorting electrical components can result in serious injury or death from electrical shock or equipment damage. Electrical power must be locked out and tagged out before performing any electrical work. All electrical work or any work done inside a control panel or junction box must be performed by a qualified electrician and comply with applicable codes.

All wiring external of the cabinet is provided by the user to comply with local electrical codes.

2.6.1 | Single-phase wiring

2.6.1.1 | Standard 300 cfm and 600 cfm cabinets and dust collectors are 120-volt single-phase. Power to the cabinet is supplied by a U-ground plug; plug it into a 120-volt outlet.

⚠ WARNING

Do not use electrical adaptors that eliminate the ground prong on 120-volt plugs. Doing so can cause electric shock and equipment damage.

2.6.1.2 | Wire the dust collector motor per **Figure 5** and motor nameplate. The motor operates with the cabinet light switch.

2.6.2 | Three-phase wiring

A wiring schematic is packed inside the cabinet's control panel. After wiring is completed, keep a copy of the schematic with the manual for future reference and for electrical replacement parts.

2.6.2.1 | Refer to the wiring schematic stowed inside the control panel mounted on the cabinet and wire from the users disconnect to the panel and from the panel to the dust collector motor, per instruction on the motor data plate.

2.6.2.2 | Check the amperage on initial startup; if the motor draws excessive amperage, gradually close the damper until the amperage is within the specifications shown on the motor plate.

2.6.2.3 | Check motor rotation: briefly start/stop and observe motor fan through housing. Rotation must match the arrow toward the outlet. Reverse wiring if required per motor plate.

⚠ WARNING

Do not look into the exhauster outlet while the paddle wheel is turning. Injury to the eye or face can occur from objects being ejected from the exhauster.

2.7 | Connect Media and Air Hose – Suction

Hoses are already attached to 300 and 600 cfm reclaimers.

2.7.1 | Refer to **Figure 5** and attach the clear media hose from under the cabinet hopper to the metering valve at the bottom of the reclaimer hopper by pushing the hose onto the barded fitting.

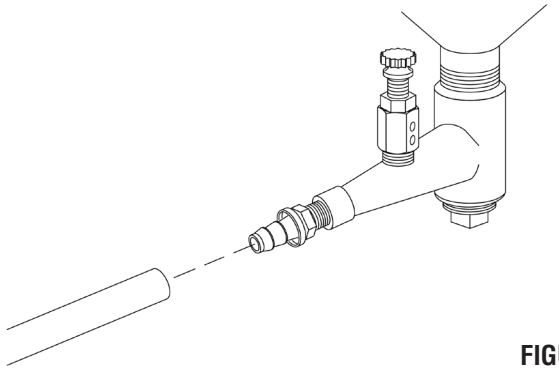

FIGURE 5

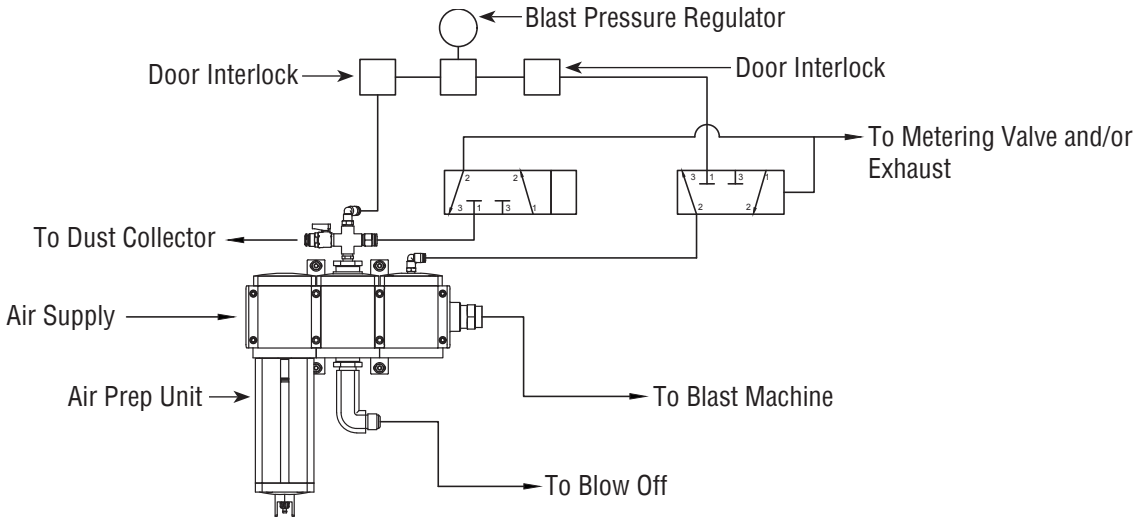

FIGURE 6

2.8 | Connect Media Blast Hose – Pressure

2.8.1 | Connect Blow-Off Hose

2.8.1.1 | Attach the 1/2” blow-off hose coming from the cabinet hopper to the compatible fitting on the blast machine piping, located between the air filter and pressure regulator. Refer to the schematic in **Figure 6**.

2.8.2 | Connect Blast Hose – Figure 7

⚠ WARNING

Hose disconnection while under pressure can cause serious injury or death. Use safety lock pins or safety wire to lock twist-on couplings together and prevent accidental separation, and also use safety cables to prevent hose from whipping should separation occur. Safety lock pins and safety cables are listed in Reclaim Component Manual.

2.8.2.1 | Connect the blast hose from the cabinet hopper to the coupling at the bottom of the blast machine. Make sure coupling gaskets are in place and couplings are secured with safety lock pins.

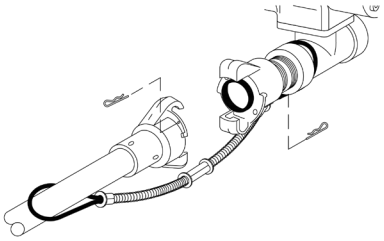

FIGURE 7

2.8.3 | Attach Blast-Machine Exhaust Hose – Figure 9

2.8.3.1 | Screw the male end of the exhaust hose into the 1” coupling in the hose adaptor plate, located on the cabinet hopper, turning the hose as required. Connect the female swivel end to the male adaptor on the blast-machine outlet valve.

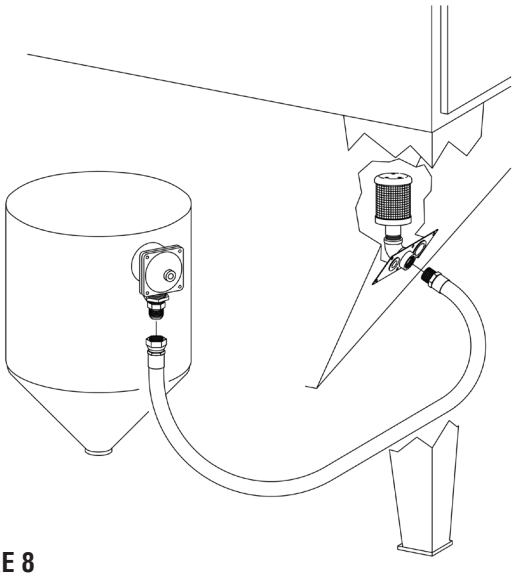

FIGURE 8

2.9 | Final Assembly

2.9.1 | Position the foot pedal on the floor at the front of the cabinet or on the foot shelf on ergonomic models.

2.9.2 | Install view-window cover lens: clean/dry surface, remove backing, apply to inside of window. Replace when pitted or frosted. Refer to Cabinet Module Manual.

3.0 | FIELD INSTALLED ACCESSORIES

Reference the associate module manuals for instructions for the field installed accessories.

4.0 | OPERATION

⚠ NOTICE

Do not pulse new dust collectors or replacement cartridges until the cartridges are properly seasoned, as instructed in the dust-collector owner's manual. Pulsing unseasoned cartridges can decrease the efficiency of dust collectors and cause premature cartridge failure.

4.1 | Media Loading

4.1.1 | Media capacity – Figure 9

Reclaimer Size	Min. Weight	Capacity
300 cfm	10 lbs.	50 lbs. (0.5 CF)
600 cfm	20 lbs.	72 lbs. (0.75 CF)
900 cfm	30 lbs.	100 lbs. (1 CF)

4.1.2 | Media loading: With exhauster OFF, add clean, dry media through the reclaimer door. Do not overfill or add directly to the cabinet hopper. Overfilling causes media carryover and hose blockage. Refill only after all media is recovered.

4.2 | Media Unloading – Suction

4.2.1 | Turn ON exhauster and clear cabinet of media. Turn OFF exhauster. Place container under metering valve and remove drain plug. If media is caked, stir through fill door. Reinstall plug before container is too heavy. Continue until empty.

4.2.2 | Before reinstalling plug, turn ON exhauster and run gun until airflow is clear. Turn OFF exhauster and reinstall plug.

4.3 | Media Unloading – Pressure

4.3.1 | Turn ON exhauster and clear cabinet. Reduce pressure to 40 psi. Place container on grate. Remove nozzle and washer, close door, close choke valve, and press foot pedal to discharge media into container. Empty as needed. Return choke valve to fully open. Clean and inspect nozzle and holder before reinstallation. Vacuum residual media if full purge is required.

4.4 | Loading and Unloading Parts

⚠ WARNING

Use solid fixturing to hold heavy parts in place. Do not remove lift equipment until the part is adequately supported to prevent movement. Moving heavy, unsupported parts may cause them to shift or topple and cause severe injury. This is especially important with the use of turntables.

NOTE: Parts must be free of oil, water, grease, or other contaminants that will clump media or clog filter cartridge. If parts are oily or greasy, degrease and dry them prior to blasting.

4.4.1 | Load and unload parts through either door.

4.4.2 | Use a screen when blasting small parts to prevent loss into the hopper. Stop blasting immediately if a part falls through.

4.4.3 | Close door; the door interlock system will prevent blasting if either door is open.

4.5 | Blasting Operation

⚠ WARNING

To avoid the inhalation of dust, which can cause respiratory illness from short-term ingestion or death from long-term ingestion:

- **Use the blow-off nozzle to blow media off parts before opening doors.**
- **After blasting, keep doors closed and exhauster running until the cabinet is clear of all airborne dust.**
- **Always close cabinet, reclaimer, and dust-collector doors before blasting. Keep all doors closed during blasting.**
- **Always wear blast gloves.**
- **Stop blasting immediately if dust leaks are detected.**

4.5.1 | Slowly open air supply. Check for leaks; correct before operation.

4.5.2 | Turn ON the lights and exhauster.

4.5.3 | Load clean, dry parts.

4.5.4 | Close doors.

4.5.5 | Set blast pressure using the pilot regulator (see Cabinet Module Manual).

4.5.6 | Insert hands into rubber gloves.

4.5.7 | Aim nozzle at workpiece and press foot pedal to begin blasting.

⚠ WARNING

Shut down the cabinet immediately if dust leaks are detected from the dust collector or cabinet. Make sure the dust-collector filter(s) are correctly seated and not worn or damaged. Prolonged breathing of any dust can result in serious lung disease or death. Short-term ingestion of toxic dust, such as lead, poses an immediate danger to health. Toxicity and health risks vary with type of media and dust generated by blasting. Identify all material being removed by blasting and obtain a safety data sheet (SDS) for the blast media.

⚠ NOTICE

To prevent rapid frosting of the view window, avoid pointing the blast nozzle toward the window and install a view-window cover lens, per Cabinet Module Manual.

4.5.8 | Support parts with a conductive backrest when off the grate. This reduces operator fatigue and prevents static buildup.

4.5.9 | If an object should fall through the grate, stop blasting immediately and retrieve it.

4.6 | Operation and Function of the Choke Valve – Pressure Systems

4.6.1 | Keep choke valve, see **Figure 10**, fully open during blasting (handle aligned with piping).

4.6.2 | Closing the valve reduces pusher-line pressure to help clear minor blockages or to empty media.

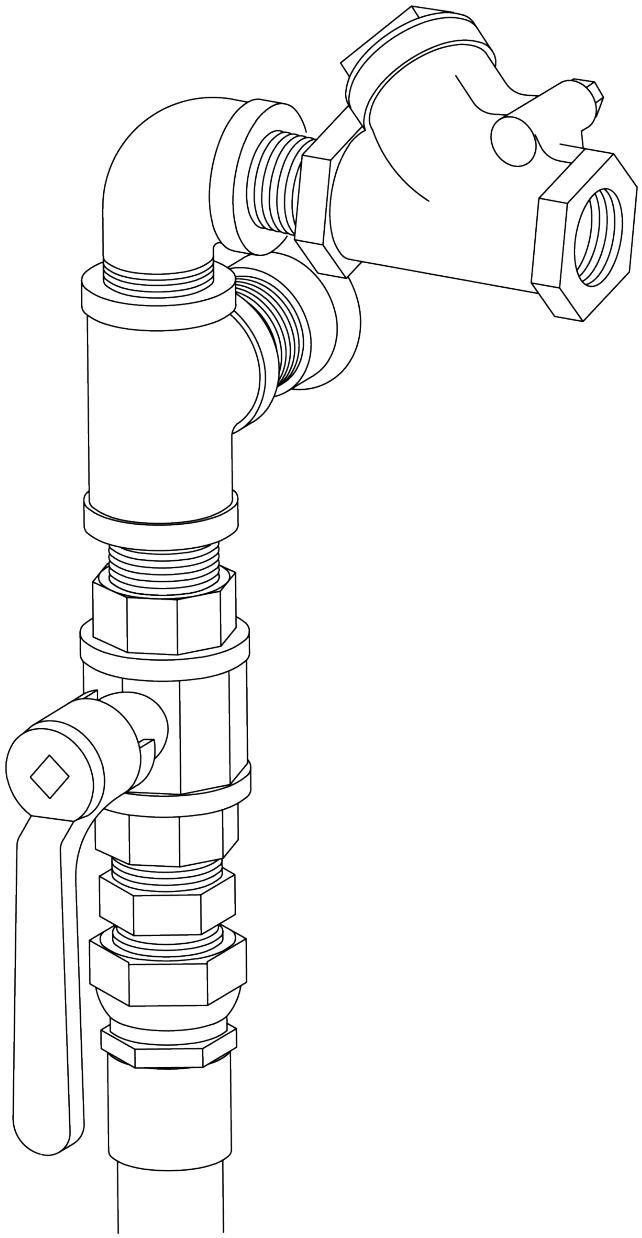

FIGURE 10

⚠ NOTICE

Do not blast with choke valve closed or partially closed. Prolonged blasting with the choke valve partially closed will accelerate wear on the metering valve.

4.7 | Blasting Technique

4.7.1 | Use smooth, continuous strokes. Typical nozzle distance is 3–6 inches; adjust for desired pattern.

4.8 | Stop Blasting

4.8.1 | Release foot pedal.

4.8.2 | Use the blow-off nozzle to blow media off cleaned parts.

4.8.3 | Keep doors closed and exhauster running until dust clears.

4.8.4 | Unload parts.

4.9 | Shutdown

4.9.1 | Shut off air supply, bleed lines, and drain air filter and pulse reservoir.

4.9.2 | Switch OFF the lights and exhauster.

5.0 | ADJUSTMENTS

Reference the modules manuals for instructions on module adjustments.

6.0 | TROUBLESHOOTING

Use the QR Code below to access the Series Cabinet Troubleshooting Guide.

7.0 | COMPONENT MANUALS

Use the **QR Code** below to access the relevant Component Manual.

7.1 | Series Cabinet – Basic Component Manual

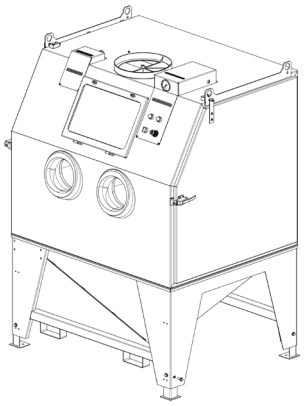

Stock #32559

7.2 | Series Cabinet – PLC Component Manual

Coming Soon

7.3 | DCU Collector Component Manual

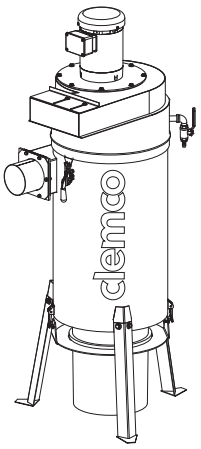

Stock #32558

7.4 | LPDC Collector Component Manual

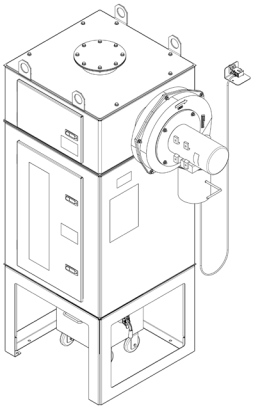

Stock #32011

7.5 | RPH Collector Component Manual

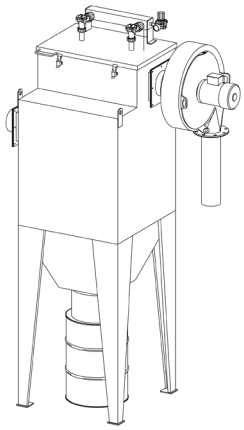

Stock #21449

7.6 | Reclaim – Suction Component Manual

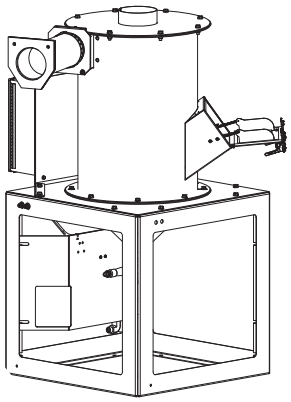

Stock #32560

7.7 | Reclaim – Pressure Component Manual

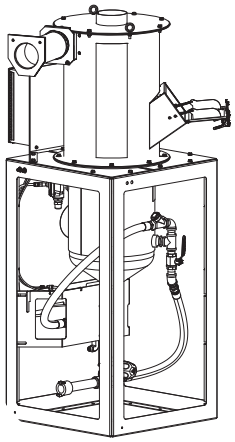

Stock #32561

This space is left intentionally blank.

This space is left intentionally blank.

clemco

OPERATIONS START-UP GUIDE

OSG 32541

©2026 Clemco Industries Corp.
One Cablecar Drive • Washington MO 63090 • Phone: 636.239.4300
customerservice@clemcoindustries.com • www.clemcoindustries.com
ALL RIGHTS RESERVED