COMPONENT MANUAL

CM 32559

clemco

Blast Cabinet

Industrial Cabinet Series Blast Systems

Date of Issue: 05/26 | Rev. Ø

NOTICE

Notice to purchasers and users of our products and this informational material

Clemco proudly provides products for the abrasive blast industry and is confident that industry professionals will use their knowledge and expertise for the safe and efficient use of these products.

The products described in this material and the information relating to these products are intended for knowledgeable, experienced users. It is the responsibility of the user to insure that proper training of operators has been performed and a safe work environment is provided.

No representation is intended or made as to: the suitability of the products described here for any purpose or application, or to the efficiency, production rate, or useful life of these products. All estimates regarding production rates or finishes are the responsibility of the user and must be derived solely from the user's experience and expertise, not from information contained in this material.

It is possible that the products described in this material may be combined with other products by the user for purposes determined solely by the user. No representations are intended or made as to the suitability of, or engineering balance of, or compliance with regulations or standard practice of any such combination of products or components the user may employ.

This equipment is only one component of a cabinet blasting operation. Other products, such as air compressors, air filters and receivers, abrasives, equipment for ventilating, dehumidifying, or other equipment, even if offered by Clemco, may have been manufactured or supplied by others. The information Clemco provides is intended to support the products Clemco manufactures. Users must contact each manufacturer and supplier of products used in the blast operation for warnings, information, training, and instruction relating to the proper and safe use of their equipment.

clemco

©2026 Clemco Industries Corp.
One Cablecar Drive • Washington MO 63090 • Phone: 636.239.4300
customerservice@clemcoindustries.com • www.clemcoindustries.com
ALL RIGHTS RESERVED

Table of Contents

1.0 Introduction ..... page 4
Scope of Manual 1.1
General Description 1.2
Control Console Functions 1.3

2.0 Field Installed Accessories ..... page 4
Aluminum Oxide (aggressive media) Kit 2.1
Cabinet Curtains Installation 2.2
Turntable with Workcar and Track 2.3

3.0 Operation ..... page 6
Operation 3.1

4.0 Adjustments ..... page 6
Blasting Pressure (pilot regulator) 4.1
Cabinet Height 4.2
Cabinet Air-Inlet Damper 4.3
Door Interlocks 4.4

5.0 Preventive Maintenance ..... page 8
Daily Inspection During Blasting 5.1
Inspect cabinet for dust leaks 5.1.1
Weekly Inspection and Maintenance Before Blasting 5.2
Inspect view-window cover lens 5.2.1
Inspect gloves 5.2.2

6.0 Service Maintenance ..... page 9
Gloves 6.1
Quick Change Glove Assembly 6.1
View-Window Cover Lens 6.3
View-Window Replacement 6.4
Window-Gasket Replacement 6.5
Window-Frame Removal 6.6
LED Light Assembly 6.7

7.0 Troubleshooting ..... page 12
Troubleshooting 7.1

8.0 Accessories & Replacement Parts ..... page 12
Optional Accessories 8.1
Cabinet Replacement Parts 8.2
View-Window Assembly 8.3
LED Light Assembly 8.4
Quick Change Gloves 8.5

Safety Alerts Key

This is the safety alert symbol. It is used to alert you to potential physical injury hazards. Obey all safety messages that follow this symbol to avoid possible injury or death.

NOTICE

Notice indicates information that is considered important, but not hazard-related, if not avoided, could result in property damage.

CAUTION

Caution indicates a hazardous situation that, if not avoided, could result in minor or moderate injury.

WARNING

DANGER

Warning and Danger, indicates a hazardous situation that, if not avoided, will result in death or serious injury.

1.0 Introduction

1.1 | Scope of Manual

1.1.1 | These instructions cover setup, operation, maintenance, troubleshooting, optional accessories, and replacement parts for the following Series Blast Cabinets:

- Series-2442 Standard Controls
- Series-3636 Standard Controls
- Series-4050 Standard Controls

The instructions cover the maintenance, troubleshooting, and spare parts of the Series cabinet module. Refer to the appropriate manual for operation and maintenance of the overall system, reclaim, and collector:

1.1.2 | The instructions contain important information required for safe operation of the cabinet. Before using this equipment, all personnel associated with the blast cabinet operation must read this entire manual and all accessory manuals to become familiar with their operation, parts, and terminology.

1.2 | General Description

1.2.1 | Series® blast cabinets enclose the blasting environment to provide efficient blasting while maintaining a clean surrounding work area. Production rates are influenced by size of nozzle, compressor output, working pressure, type and size of media, and angle and distance of the nozzle from the blast surface.

1.2.2 | Cabinet enclosure: This manual covers three Series cabinet sizes.

Series-2442 —Approximate work chamber dimensions:
—42” wide x 24” deep x 39” high.

Series-3636 —Approximate work chamber dimensions:
—36” wide x 36” deep x 39” high.

Series-4050 —Approximate work chamber dimensions:
—50” wide x 40” deep x 41” high.

1.2.3 | Refer to System Start Up Guide for general arrangement & installation of system components, theory of operation, compressed air requirements, electrical requirements, and component manuals.

1.3 | Control-Console Functions – Figure 1

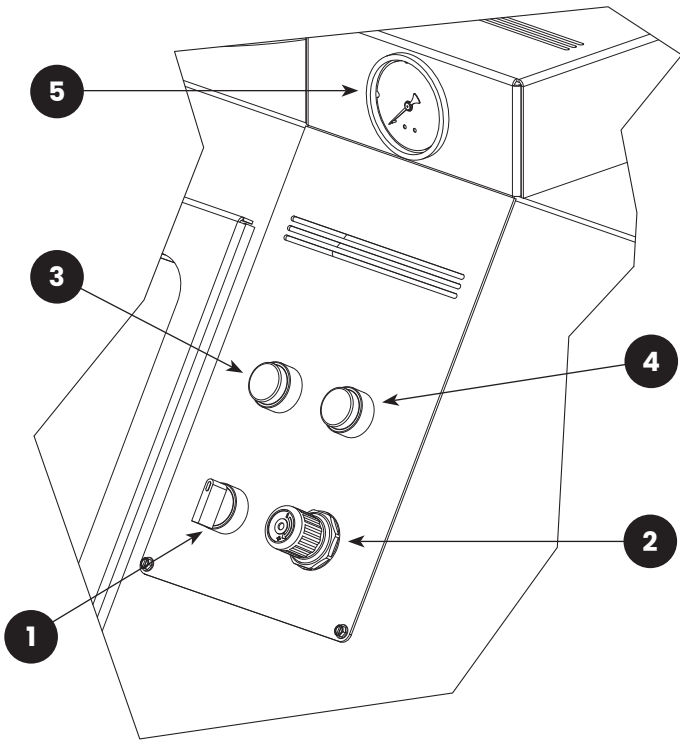

FIGURE 1: (1) Lift Leg Selector Switch (Optional); (2) Blast Pressure Adjusting Knob; (3) Green Start Push Button; (4) Red Stop Push Button; (5) Blast Pressure Gauge

1.3.1 | Lift-Legs Selector Switch (optional): Raises and lowers cabinet height.

1.3.2 | Blast-Pressure Adjustment: The pilot pressure-regulator adjusts blast pressure to suit the application. Refer to **Section 4.1** to adjust blast pressure.

1.3.3 | Green Start Pushbutton Switch: The button lights up when power is applied to the cabinet.

Pushing in the button turns on the cabinet light and starts the exhauster. Other controls will not operate unless the exhauster is running.

1.3.4 | Red Stop Pushbutton Switch: Pushing in the button stops the exhauster and all other controls.

1.3.5 | Blast-Pressure Gauge: Displays blast pressure, which is adjusted by the blast-pressure regulator, as noted above.

2.0 | Field Installed Accessories

Optional accessories are shown in **Section 8.1**

2.1 | Aluminum Oxide (aggressive media) Kit

2.1.1 | An optional aluminum oxide kit is available factory installed or may be field installed later.

Factory-installed kits consist of black-rubber cabinet curtains with grommets, curtain hardware, and a boron carbide nozzle.

Field-installed (or replacement factory-installed) kits consist of black-rubber cabinet curtains (refer to **Section 2.2** for curtain installation), a boron carbide nozzle, and light-lined flex hose. If the existing flex hose is in good condition, reserve the new hose for future replacement.

2.2 | Cabinet Curtains Installation

2.2.1 | Match curtains to corresponding wall and doors.

2.2.2 | Front and rear walls: Position the curtains on the wall to be protected. Use the curtains as templates to mark each mounting point through the grommet holes along the upper edge of the curtain. **NOTE:** When laying out the attachment points, the upper edge of the rear curtain should be below the bottom edge of the air-duct partition. Remove the curtains and drill a .187" (3/16") diameter hole at each point marked. Install the curtains using the fasteners provided (machine screw, 11/16" OD flat washer, lock washer, and nut) at each grommet. The flat washer is used between the screw head and the rubber-curtain grommet on all curtains.

2.2.3 | Doors: Using protectors against the curtains and outer doors; clamp the door curtains in place. **NOTE:** When laying out the attachment points, the upper edges of the door curtains should be even with the outer edges of the door's soundproofing panel. Insert a #10 self-drilling screw with an 11/16" OD flat washer through the grommet holes. Use a screw gun with a 5/16" socket to drill and thread the screws through the door's inner wall at each grommet.

2.3 | Turntable with Workcar and Track

2.3.1 | Components of the turntable and track assembly are shown in **Figure 2**. The assembly consists of:

- The inside track assembly, which is placed inside the cabinet.
- The hinged track extension attaches to the support table and swings up to clear the door.
- Track support table.
- Turntable and workcar assembly.

NOTE: The track may be placed on either side of the cabinet, allowing entry through either the right side or left side door; the right side is shown in the illustrations. When installing

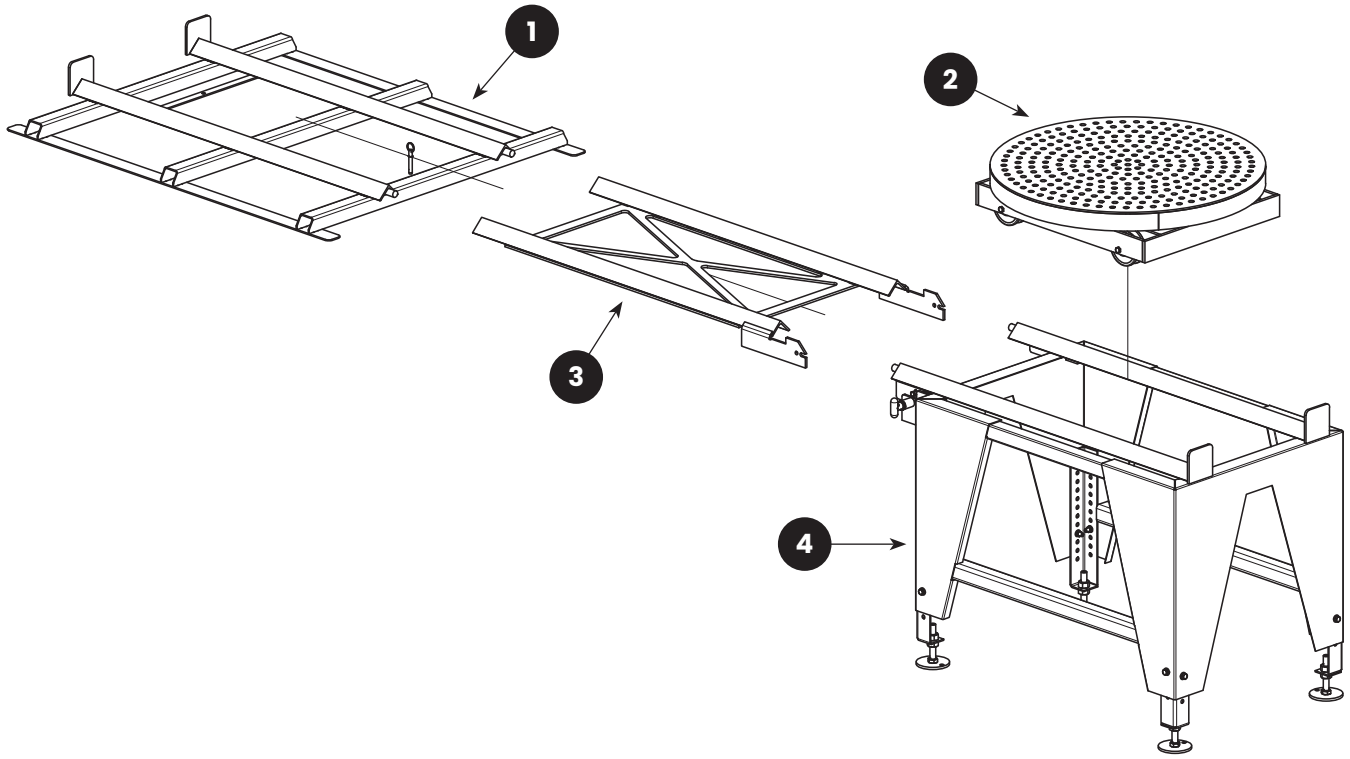

FIGURE 2: (1) Inside Track; (2) Turntable & Workcar; (3) Hinged Track Extension; (4) Outside Track

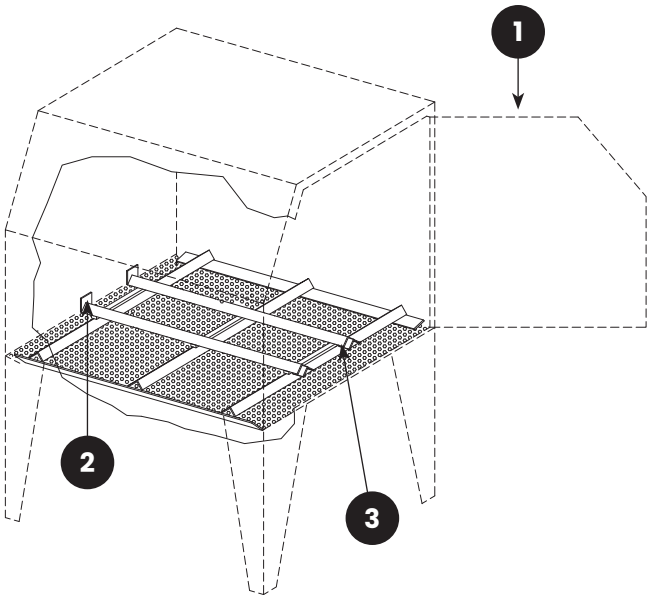

FIGURE 3: (1) Entry Door; (2) Stops; (3) Grate

the inside track, place it so the stops, shown in Figure 3, are opposite the entry door.

2.3.2 | Place the inside track in the cabinet over the existing grate, as shown in **Figure 3**.

2.3.3 | Position the track support table and extension, as shown in **Figure 4**. When the hinged extension is lowered, the extension tracks must rest on the angled locating supports welded to the bottom of the inside tracks, and it must butt against the inside tracks.

2.3.4 | Loosen the leveling-pad lock nuts and raise or lower the pads, as needed to adjust the height of the table, to make sure that the inside and outside tracks are aligned, that the hinged extension rest evenly on the support angles when the extension is lowered, and that the table is level.

2.3.5 | Raise the track extension, and then open and close the door to make sure they function correctly. When certain the table and tracks are aligned and level, and that the workcar moves smoothly on all tracks, tighten the leveling-pad lock nuts and anchor the support table to the floor through the holes in the leveling pads.

3.0 | Operations

3.1 | Refer to System Start Up Guide for cabinet operation details.

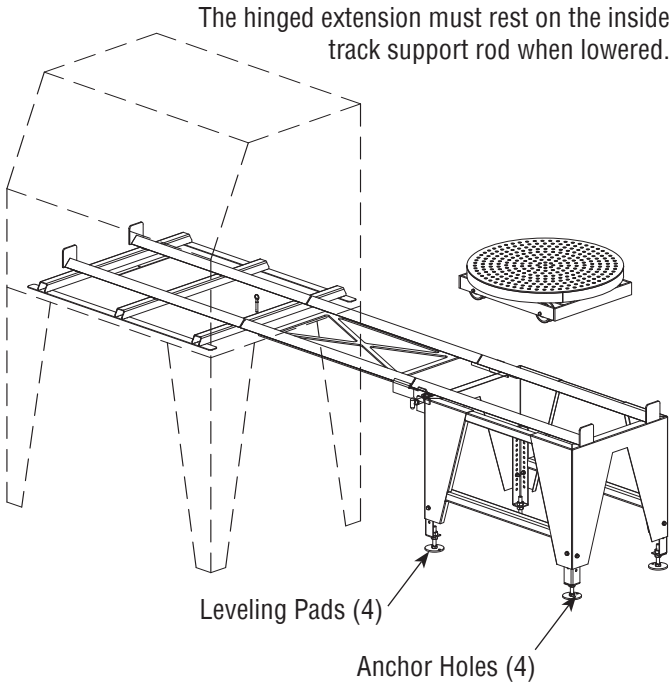

FIGURE 4

4.0 | Adjustments

4.1 | Blasting Pressure (pilot regulator) – Figure 5

4.1.1 | The pilot regulator, located on the upper-right side of the cabinet's control console, enables the user to adjust blasting pressure to suit the application while blasting. The suitable pressure for most purposes is about 60-80 psi. Lower pressure may be required on delicate substrates and will reduce media breakdown. Higher pressure may be required for difficult blasting jobs on durable substrates, but will increase media break down. Optimal production can only be achieved when pressure is carefully monitored.

4.1.2 | Pressure registers on the gauge only while blasting. To adjust pressure, unlock the regulator knob by pulling it out, as shown in **Figure 5**. Turn the knob clockwise to increase pressure or counterclockwise to decrease pressure. Once operating pressure is set, push the knob to lock it and maintain the setting.

4.1.3 | When blasting below 40 psi on pressure blast systems, first pressurize the blast machine at 40 psi and then turn the pressure to the required setting before blasting the part. If the initial pressure is below 40 psi, the pop-up valve may not seal.

When viewed from knob end, turn knob clockwise to increase pressure; turn counterclockwise to decrease pressure.

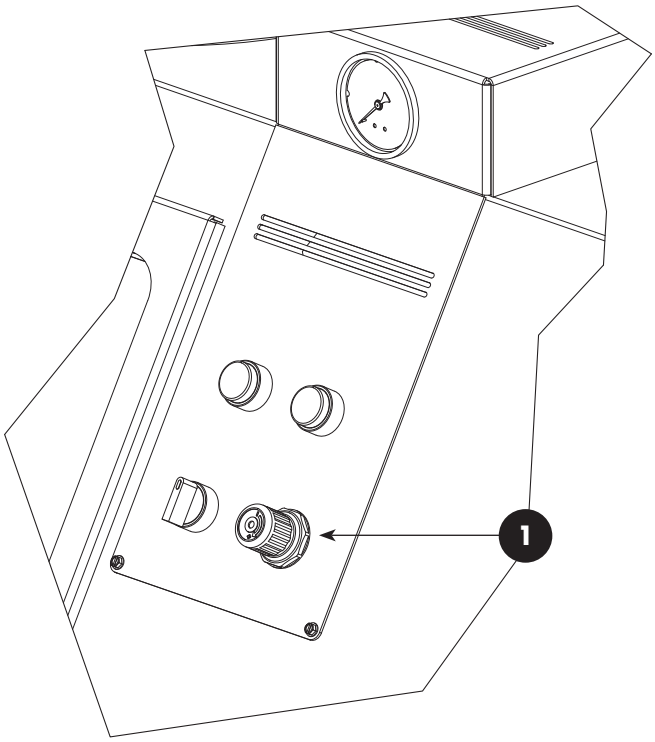

FIGURE 5: (1) Adjusting Knob (Pull knob out to unlock and adjust pressure. Push knob in to lock pressure.)

4.2 | Cabinet Height

4.2.1 | Manual Adjustable Legs (standard) – Lift cabinet with a forklift. Once cabinet is off the ground, remove leg bolts and adjust the leg to the required height, reattaching the bolts. Adjust the other legs, insuring that they are all set to the same height. Misalignment may cause tilted and unstable. Lower cabinet to the ground, and reanchor.

4.2.2 | Hydraulic Lift Legs (optional) - The lift-legs selector switch, located on the cabinet control console, adjusts cabinet height to provide the best glove-port and view window height for the operator. Move the switch to raise or lower the cabinet; release the switch when the correct height is attained.

4.3 | Cabinet Air-Inlet Damper

4.3.1 | Once the inlet damper is initially set it seldom requires readjustment. The initial setting produces approximately .5” to .75” of static pressure in the cabinet enclosure. Do not confuse cabinet static pressure with reclaimer static pressure, which is controlled by the dust-collector damper. Reclaimer pressure must be set before cabinet pressure.

4.3.2 | Using a manometer is the most accurate method of monitoring and adjusting cabinet pressure. Following the

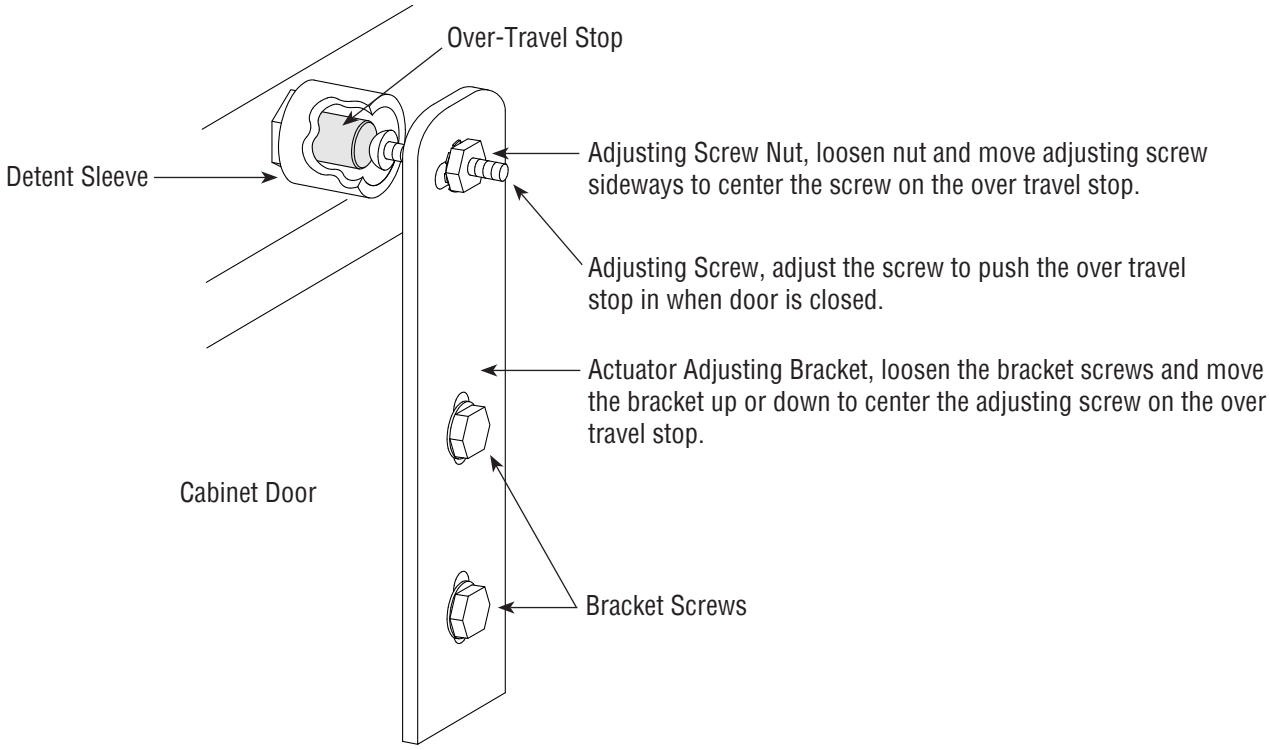

FIGURE 6

instructions packed with the manometer, start the exhauster, insert the needle into a glove, and adjust pressure using the cabinet's air-inlet damper. Open the damper farther to decrease static pressure or close it farther to increase pressure.

4.3.3 | If a manometer is not available, use the gloves as an indicator. With the exhauster ON, the gloves should be inflated but not elevated off the grate.

4.4 | Door Interlocks – Figure 6

⚠ WARNING

Never bypass the door interlock system. Doing so can result in serious injury from unexpected blasting.

4.4.1 | The door interlocks disable the blasting control circuit when doors are open. To enable blasting, the door-interlock switches must be engaged when doors are closed. The interlocks are set at the factory and do not normally require field adjustment unless parts are replaced. When adjustment is required, proceed as follows.

4.4.2 | Close cabinet doors.

4.4.3 | Loosen the actuator bracket screws and adjusting screw nut. Move the actuator bracket up or down, and the adjusting screw sideways, as needed to center the adjusting screw on the over-travel stop (in center of detent sleeve). Tighten the bracket screws.

4.4.4 | Turn the adjusting screw in or out as required to engage the switch without applying excessive pressure on it. Tighten the adjusting screw nuts.

4.4.5 | Test the operation with the doors open and then closed. Negative pressure inside the cabinet may cause the doors to flex inward. Tests should be performed with the exhauster running. Point the nozzle away from the door during the tests and open the door only enough to disengage the interlock switch. The interlocks should stop the blasting when either door is open and permit blasting when the doors are closed.

5.0 | Preventative Maintenance

⚠ WARNING

Failure to wear an approved respirator and personal protection when servicing dust-laden areas of the cabinet and dust collector, as well as when emptying the container, can result in lung disease, serious skin or eye irritation, or other health issues. Toxicity and health risk vary with type of media and dust generated by blasting. The respirator must be approved for the type of dust generated. Identify all material being removed by blasting and obtain a safety data sheet (SDS) for the blast media.

To avoid unscheduled downtime, establish an inspection schedule. Inspect all parts subjected to media contact, including the gun and nozzle, media hose, flex hose, wear plate, and all items covered in this section. Adjust frequency of inspections as needed, based on the following:

- **Usage:** Frequently used cabinets require more maintenance and inspections than those occasionally used.
- **Type of media:** Aggressive media wears parts faster than non-aggressive media.
- **Condition of parts being blasted:** Heavily contaminated parts require more maintenance to the cabinet's media recovery system.
- **Friability of media:** Media that rapidly breaks down require more maintenance to the cabinet's media recovery system and dust collector.

5.1 | Daily Inspection During Blasting – Have Someone Do the Following:

5.1.1 | Inspect cabinet for dust leaks: During operation, inspect cabinet door seals for media leaks. Dust leaking from the inlet damper or other places on the cabinet indicates saturated filter cartridge. Refer to the dust-collector owner's manual.

5.2 | Weekly Inspection and Maintenance Before Blasting with Air OFF

5.2.1 | Inspect view-window cover lens: Inspect the window cover lens. Replace as needed, per **Section 6.3**.

5.2.2 | Inspect gloves: Inspect gloves for wear. The first sign of deterioration may be excessive static shocks. Replace as needed, per **Section 6.1**.

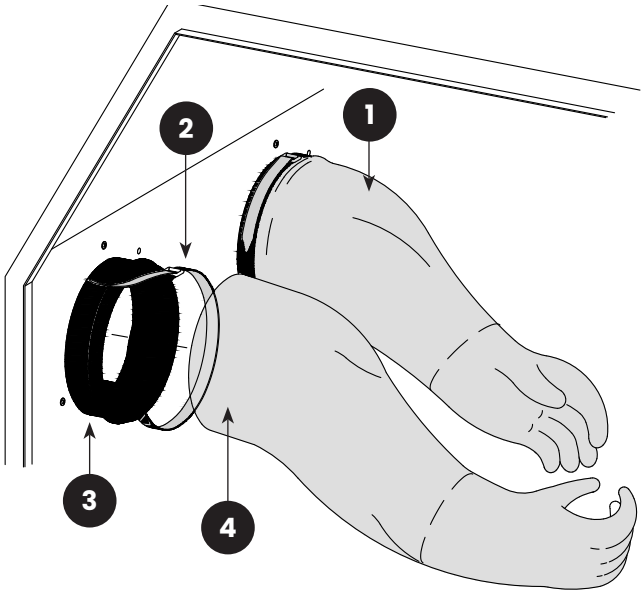

FIGURE 7: (1) Glove & Gauntlet Attached; (2) Hook & Loop Strap; (3) Armrest Glove Mount; (4) Gauntlet End of Glove

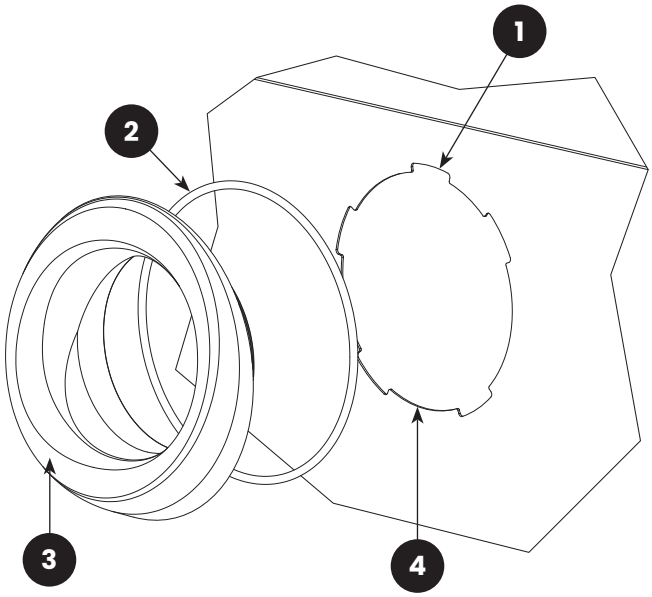

FIGURE 8: (1) Glove Mount Locking Slot; (2) O-Ring; (3) Armrest Glove Mount; (4) Cabinet Glove Opening

6.0 | Service Maintenance

6.1 | Gloves

6.1.1 | Special static-dissipating gloves are provided for operator comfort. Gloves need to be replaced as they wear. The first sign of deterioration may be excessive static shocks.

6.1.2 | Remove old gloves: Glove gauntlets are stretched over glove mounts and held in place with hook and loop straps. To remove the old gloves, loosen the straps by pulling the hook end of the straps away from the loop material, as shown in Figure 7, and then pull the straps and gloves off the mounts.

6.1.3 | Attach new gloves: The gauntlet end of the gloves are stretchable. To install a glove, stretch the gauntlet over the glove-mount's ridge and as close to the front of the cabinet as possible.

6.1.4 | Place the smooth side of the strap over the attached glove. Insert the strap end through the buckle and pull the strap taut. While keeping the strap taut, fasten the straps by pressing the hook end into the loop material.

6.2 | Quick-Change Gloves and Glove Mounts – Figure 8

6.2.1 | The quick-change glove ports provide fast changeover of gloves and armrest-glove mounts.

6.2.2 | Attach gloves to the glove mounts, as noted in **Section 6.1.**

6.2.3 | Unlock the glove mounts and gloves from the cabinet by turning them counterclockwise.

6.2.4 | Remove the glove mount and glove from the cabinet by pulling the gloves through the glove ports.

6.2.5 | To reattach the mount and glove, place arms into the replacement gloves and insert both gloves through both glove ports.

6.2.6 | Align the tabs in the glove mount with the slots on the cabinet opening, push in on the glove mount, and then turn it clockwise to lock it.

6.3 | View-Window Cover Lens

6.3.1 | Rapid frosting of the view window can be avoided by directing ricocheting media away from the window and by installing a cover lens on the inside surface of the window. Using cover lenses prolongs the life of the view window.

6.3.2 | The best way to install a cover lens is to remove the window from the cabinet. If, for some reason, it is not practical to remove the window, the lens may be applied with the window glass in place.

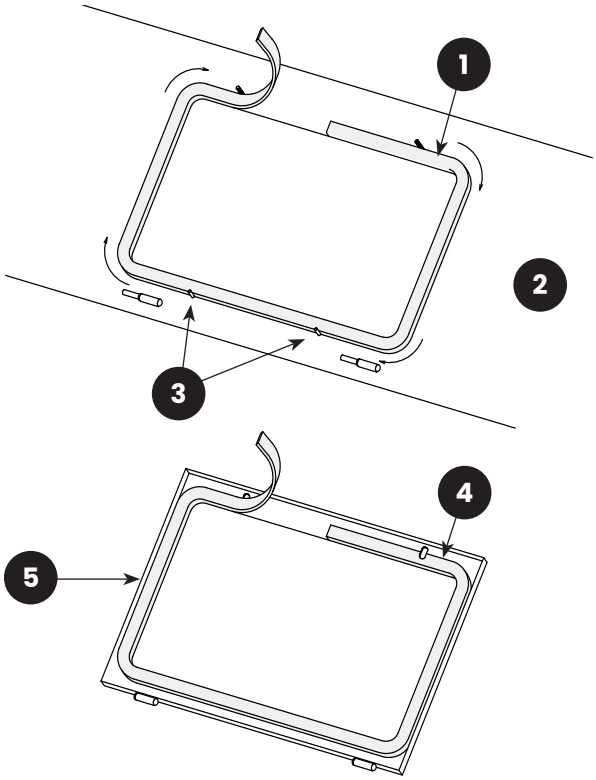

FIGURE 9: (1) 5/16” X 3/4” Gasket; (2) Cabinet Frame; (3) Support Tabs; (4) 5/32” x 3/4” Gasket; (5) Window Frame

6.3.3 | To install a cover lens, carefully remove the adhesive backing making sure the adhesive remains on the lens and apply the lens to the clean, dry, inner surface of the view window. When the cover lens becomes pitted or frosted, replace it.

6.4 | View-Window Replacement

⚠ WARNING

Do not use plate glass for replacement view windows. Plate glass shatters on impact and can cause severe injury. Use only genuine Clemco® laminated replacement glass.

6.4.1 | Remove the two window frame nuts located on the upper edge of the window frame and swing the window frame open. If the frame is to remain open for cleaning or other reasons remove it, per **Section 6.6**.

6.4.2 | Remove the old window.

6.4.3 | Inspect the window-frame gaskets on both the window frame and on the cabinet. If either gasket is damaged replace it, per **Section 6.5**.

6.4.4 | Install a view-window cover lens, per **Section 6.3**.

6.4.5 | Set the new window (cover lens down) squarely over the window opening, making sure that all edges of the window are centered and overlapping the window gasket, and that the window is resting on the window support tabs.

6.4.6 | Swing the window frame into place and tighten the frame nuts.

6.5 | Window-Gasket Replacement – Figure 9

6.5.1 | Inspect the gaskets when changing the view window. Replace the window-frame gasket and cabinet-window-opening gasket at the first sign of media leakage around the view window, or if gaskets are worn or otherwise damaged.

6.5.2 | Remove the window and window frame, per **Section 6.6**.

6.5.3 | Remove all the old gasket material and clean the surfaces of the cabinet and window frame.

6.5.4 | Peel a short section of adhesive backing from the 5/16”-thick strip gasket and adhere the gasket to the center of the top edge of the window opening, as shown in Figure 6. Peel additional backing as needed and work the strip around the radius of each corner, pressing it firmly to bond. Trim the gasket to fit and compress the ends to seal.

6.5.5 | Using 5/32”-thick strip gasket, repeat the process on the underside of the window frame.

6.5.6 | Trim around the window-frame bolt slots, as needed.

6.6 | Window-Frame Removal – Figure 10

6.6.1 | Remove the two window frame nuts located on the upper edge of the window frame and swing the window frame open.

6.6.2 | Remove the window to prevent breakage.

6.6.3 | Pivot the window frame up or down until tension is off the frame hinges.

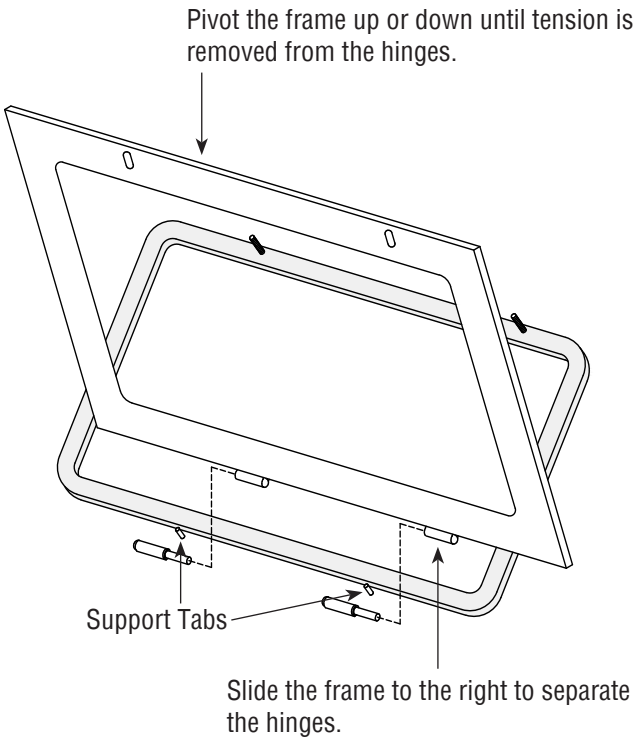

FIGURE 10

6.6.4 | To remove, slide the frame to the right. The hinges separate, as shown in **Figure 10**.

6.6.5 | Replace the frame in reverse order. Align the top bolt holes with the bolts; slide the frame as necessary.

6.6.6 | Set the window squarely over the window opening. Make sure that all edges of the window are centered, overlapping the window gasket, and that the window is resting on the window support tabs.

6.6.7 | Swing the window frame into place and tighten the frame nuts.

6.7 | LED Light Assembly

⚠ WARNING

Use an approved stepladder when servicing the light assembly. Do not climb on top of the cabinet. The cabinet top will not support the weight of a person. Failure can result in injury and property damage.

6.7.1 | Remove light-mount cover

6.7.1.1 | Turn OFF electrical power.

6.7.1.2 | Remove the screws that attach the light cover and gauge console cover to the cabinet and remove the covers.

6.7.2 | Gasket replacement

6.7.2.1 | Remove light cover as stated in **Section 6.7.1**.

6.7.2.2 | Remove the four nuts that attach the light shroud to the cabinet and remove the shroud, light, and diffuser lens, set to the side.

6.7.2.3 | Remove all the old gasket material and clean the surface of the cabinet.

6.7.2.4 | Lay a section of strip gasket along the edge of the opening and cut to length, allowing 3/4” overlap on each end. Peel a short section of adhesive backing and adhere the strip gasket to the top edge of the light opening, as shown in Figure 8. Press the gasket to bond. Repeat the process for each side, compressing the ends to seal.

6.7.3 | Diffuser lens replacement

6.7.2.1 | Remove light cover as stated in **Section 6.7.1**.

6.7.3.2 | Remove the four nuts that attach the light shroud to the cabinet and remove the shroud and light, set to the side.

6.7.3.2 | Replace lens. Reattached shroud, light, and covers.

6.7.4 | LED light module replacement

6.7.4.1 | Turn OFF electrical power and perform lockout and tagout procedure to power supply.

6.7.4.2 | Remove the light-mount cover, per **Section 6.7.1**.

6.7.4.3 | Note the wire connections. Current connections are as follows:

• **Brown wire**	**Hot**
• **Blue wire**	**Neutral**
• **Yellow w/green stripe**	**Ground**

If color coding is different from that shown above, make note of the color code before disconnecting the wires.

6.7.4.4 | Remove light lead wires from the WAGO connector in the light assembly.

6.7.4.5 | Place the new light in position on the light shroud and reconnect the light leads to the WAGO connectors.

6.7.4.6 | Apply power to test the light.

6.7.4.7 | Reattach the covers.

7.0 | Troubleshooting

7.1 | Refer to System Start Up Guide for QR code to System troubleshooting.

8.0 | ACCESSORIES & REPLACEMENT PARTS

8.1 | Optional Accessories
Turntables and Turntables with Tracks

⚠ WARNING

Turntable capacities are based on concentric loading. Use solid fixturing to hold heavy parts in place. Do not remove lift equipment until the part is adequately supported to prevent movement. Moving or rotating heavy, unsupported or off-centered parts may cause them to shift or topple, and cause severe injury.

Fixed-Base Turntable Without Bearing
— 20” dia. 25 lb capacity **12412**

Fixed-Base Turntable with Bearing, 500 lb Capacity – Figure 11

(-) 20” dia. assembly, 500 lb capacity..... **12411**
(-) 30” dia., assembly 500 lb capacity **14138**
1. Turntable, replacement
   - 20” diameter 500 lb capacity **18329**
   - 30” diameter 500 lb capacity **21390**
2. Bearing, 1-1/2” bore **11517**
3. Protector, bearing **13479**
4. Screw, 1/2-NC x 1-1/2” cap **03454**
5. Washer, 1/2” lock **03516**
6. Nut, 1/2-NC hex **03511**

Turntable top design varies with turntable size.

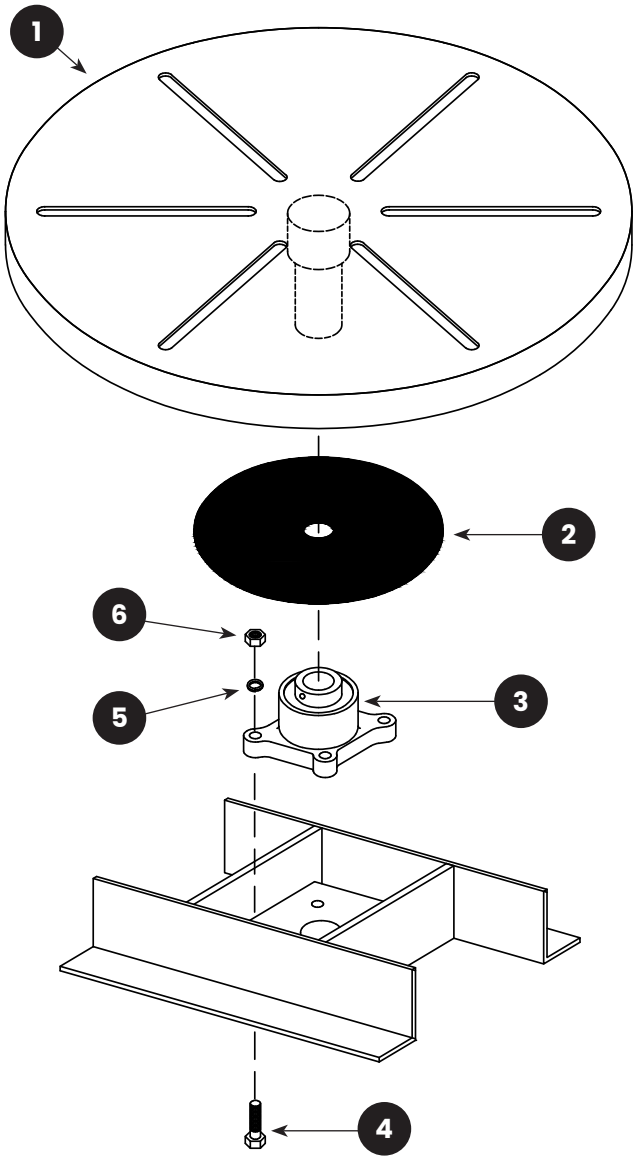

FIGURE 11

Turntable with Workcar and Track, 500 lb Capacity Figure 12

(-) 20” dia. turntable and track assembly
- for 65 series **13530**
- for 220 series **12835**

(-) 30” turntable and track assembly
- for 220 series **24045**

(-) Turntable & workcar assembly, replacement
Items shown in Figure 32, less track
- 20” diameter **24205**
- 30” diameter **24086**

1. Turntable, replacement
   - 20” diameter **18329**
   - 30” diameter **21390**
2. Bearing, 1-1/2” bore **11517**
3. Protector, bearing **13479**
4. Screw, 1/2-NC x 1-1/2” cap **03454**
5. Washer, 1/2” lock **03516**
6. Nut, 1/2-NC hex **03511**
7. Caster, 4” V groove **11594**

All other track items are special order. Contact distributor for price and availability.

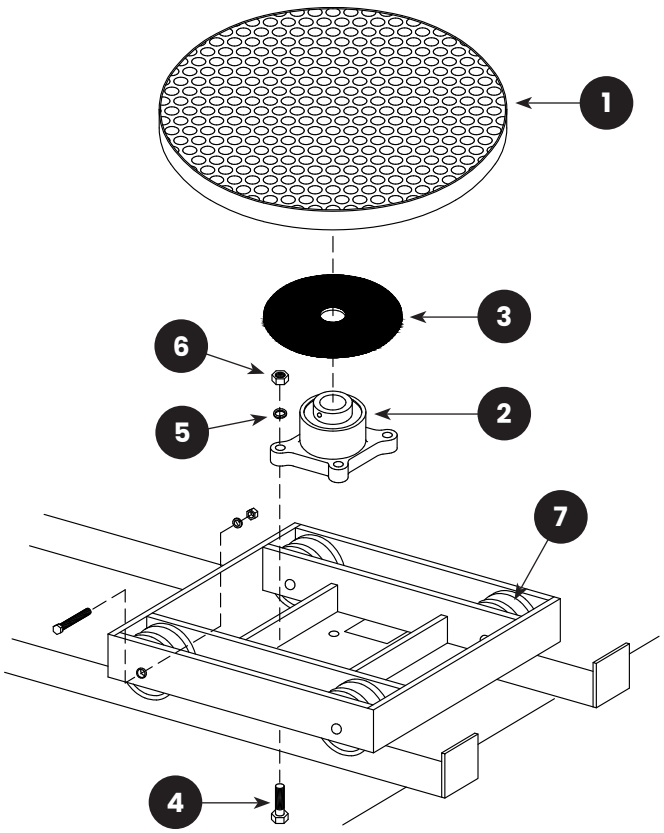

FIGURE 12

— Lock pins (pkg of 25) for twist-on hose couplings **11203**
— Safety cable, for 1/2” to 1-1/4” OD hose **15012**
— Manometer kit **12528**
— Anti-fatigue floor-mat, 2 ft x 3 ft, for front of cab..... **24744**

Aluminum oxide kit, factory-installed, includes #5 boron carbide nozzle, black-rubber cabinet curtains with grommets and curtain hardware. Does not include rubber reclaimer liners.

- for Series Cabinet 2442 Suction **32566**
- for Series Cabinet 3636 Suction **32562**
- for Series Cabinet 3636 Pressure **32563**
- for Series Cabinet 4050 Suction **32564**
- for Series Cabinet 4050 Pressure **32565**

Rubber cabinet curtains, black

Curtain set, w/mounting hardware
- for Series Cabinet 2442 ..... **32503**
- for Series Cabinet 3636 ..... **32507**
- for Series Cabinet 4050 ..... **32511**

Back curtain
- for Series Cabinet 2442 ..... **32502**
- for Series Cabinet 3636 ..... **32506**
- for Series Cabinet 4050 ..... **32510**

Front curtain
- for Series Cabinet 2442 ..... **32500**
- for Series Cabinet 3636 ..... **32504**
- for Series Cabinet 4050 ..... **32508**

Door curtain, each (2 required)
- for Series Cabinet 2442 ..... **32501**
- for Series Cabinet 3636 ..... **32505**
- for Series Cabinet 4050 ..... **32509**

This space is left intentionally blank

8.2 | Cabinet Replacement Parts – Figure 13

1. Gasket, 5/16” x 1” adhesive-backed, per foot, specify feet required
   - Series 2442 door, 10 ft. req. per door **00187**
   - Series 3636 door, 12 ft. req. per door **00187**
   - Series 4050 door, 13 ft. req. per door **00187**
2. Damper, air-inlet **33042**
3. Door assembly, left
   - for 2442 series **33192**
   - for 3636 series **33074**
   - for 4050 series **32815**
4. Door assembly, right
   - for 2442 series **33195**
   - for 3636 series **33073**
   - for 4050 series **32819**
5. Grate
   - for 2442 series **33200**
   - for 3636 series **33086**
   - for 4050 series **33037**
6. Latch kit, door **20064**
7. Gauge Console Assembly **33032**
8. Limit Flag, door **33039**
9. Interlock Switch, door **30299**
   - Cover **30201**
10. Adjustable Leg Weldt **33053**
11. 3/8NC x 1.00 Bolt **29797**

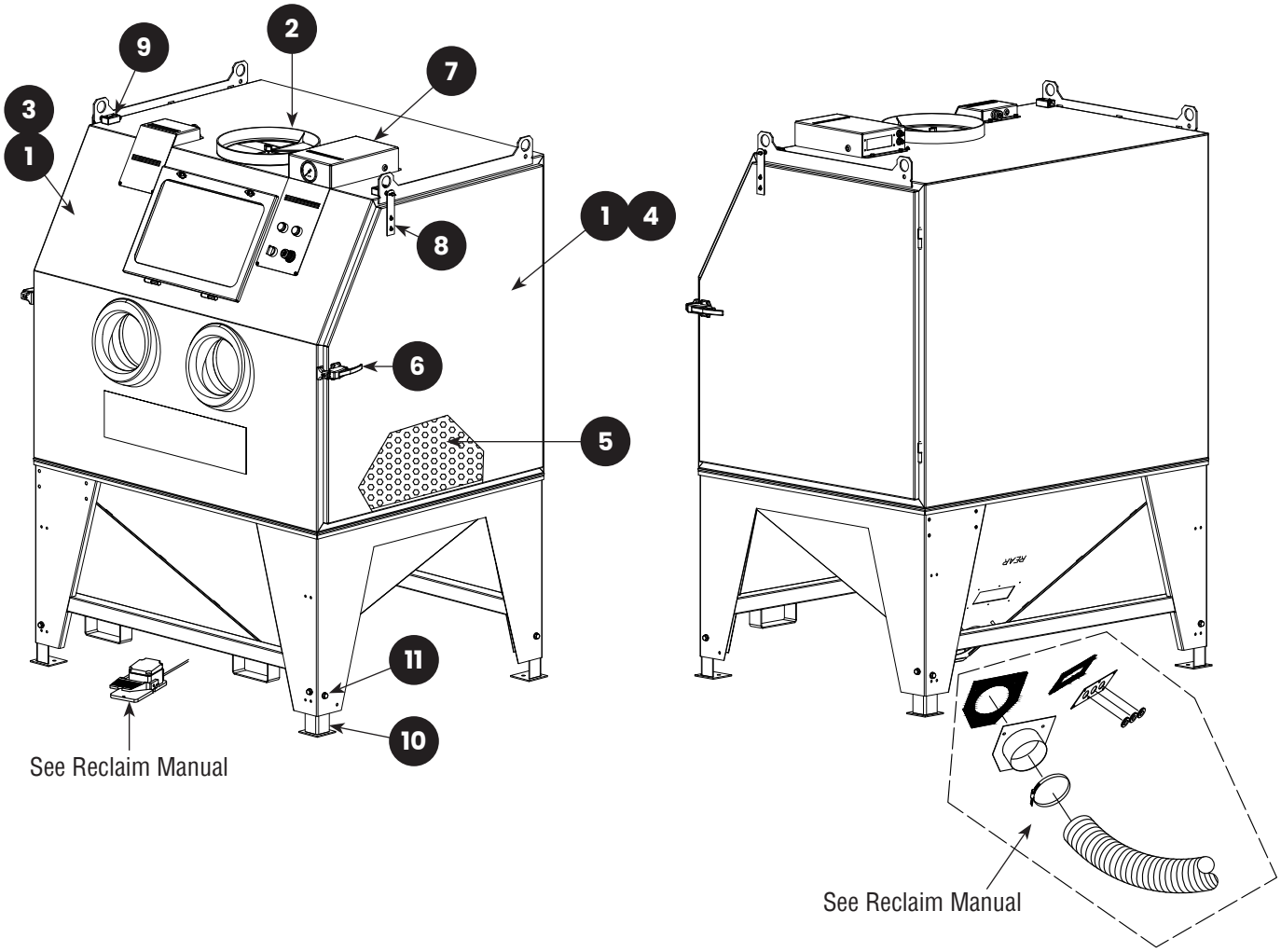

FIGURE 13

8.3 | View-Window Assembly – Figure 14

FIGURE 14

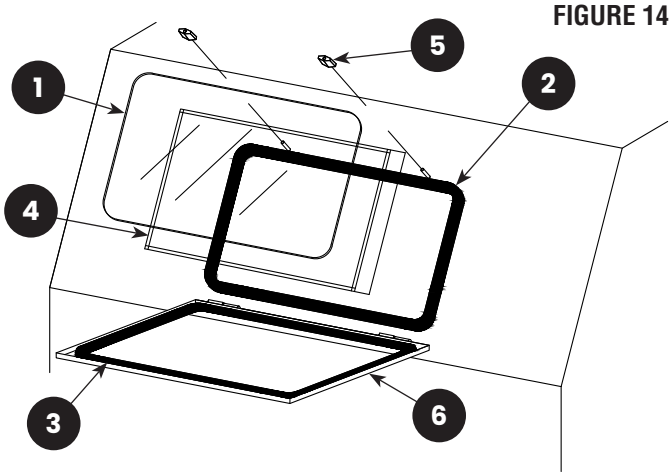

1. Window glass, 12.5” x 19.5” laminated **12212**
2. Gasket, 5/16” x 3/4”, applied to cabinet per foot, 6-feet required **00189**
3. Gasket, 5/32” x 3/4”, applied to window frame per foot, 6-feet required **00192**
4. Cover lens, pkg. of five **06190**
5. Nut, plastic, window frame, 2 required on Conventional **23035**
6. Window frame, quick change for Conventional model cabinet **22826**

8.4 | LED Light Assembly – Figure 15

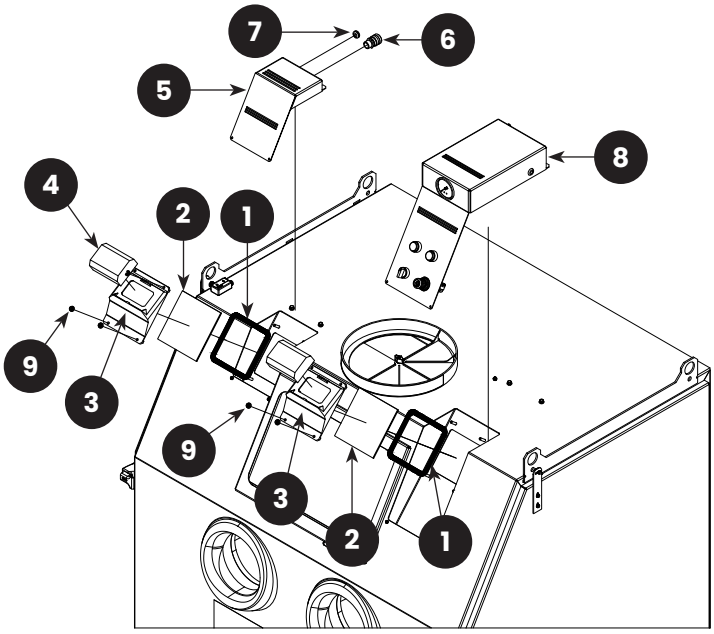

1. Gasket 5/32” x 1/2” **00185**
2. Diffuser Lens **33035**
3. Light Shroud **33031**
4. LED Light **33036**
5. Light Cover, Left **33034**
6. Strain Relief **02213**
7. Grommet, 5/16” ID **30447**
8. Gauge Console Assembly **33032**
9. 1/4 - 20 Serrated Hex Nuts **28063**

8.5 | Gloves and Glove Attachments – Figure 16

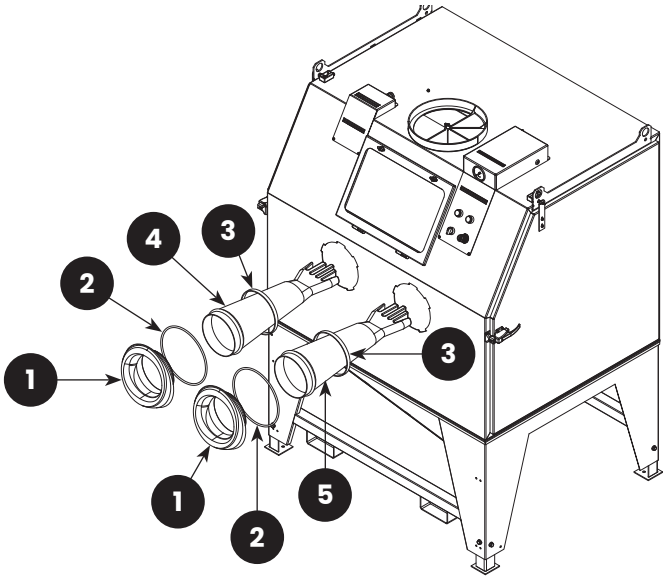

1. Twist Lock Glove Port **33040**
2. O-Ring, 449 ..... **33041**
3. Hook & Loop Cable Tie **30397**
4. Glove, Left **12710**
5. Glove, Right **12711**

clemco

DCU DUST COLLECTOR

CM 32559

©2026 Clemco Industries Corp.
One Cablecar Drive • Washington MO 63090 • Phone: 636.239.4300
customerservice@clemcoindustries.com • www.clemcoindustries.com
ALL RIGHTS RESERVED