COMPONENT MANUAL

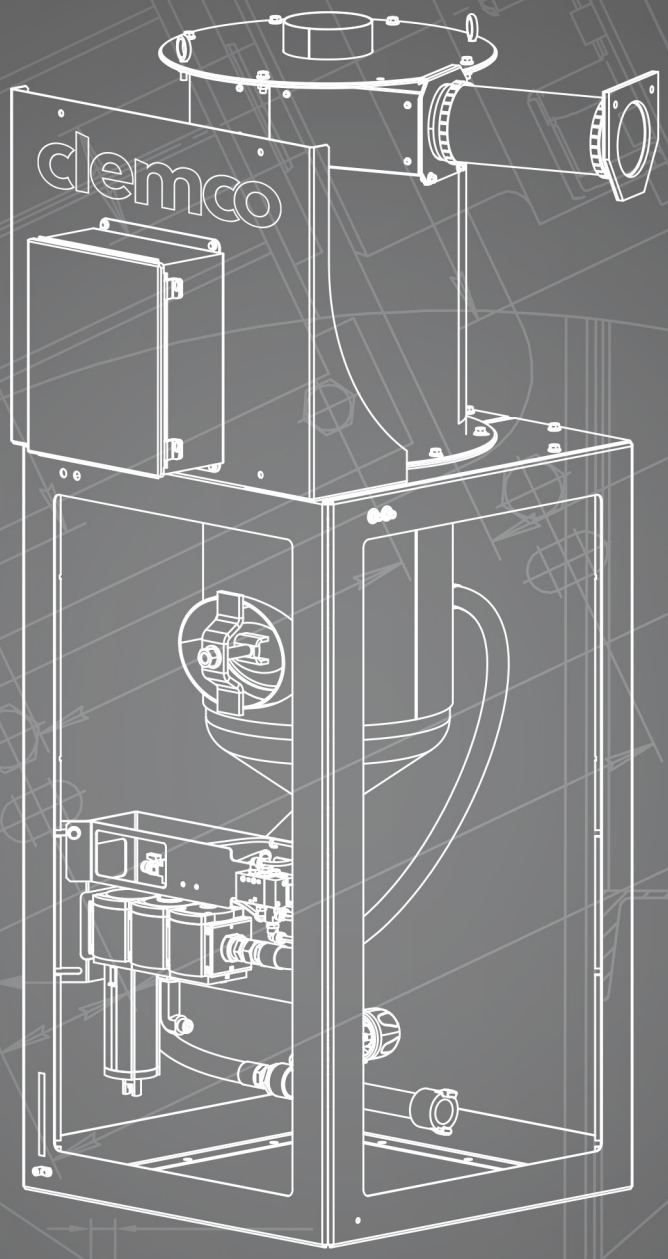

CM 32561

clemco

Pressure Reclaim

Industrial Cabinet Series Blast Systems

Date of Issue: 05/26 | Rev. Ø

NOTICE

Notice to purchasers and users of our products and this informational material

Clemco proudly provides products for the abrasive blast industry and is confident that industry professionals will use their knowledge and expertise for the safe and efficient use of these products.

The products described in this material and the information relating to these products are intended for knowledgeable, experienced users. It is the responsibility of the user to insure that proper training of operators has been performed and a safe work environment is provided.

No representation is intended or made as to: the suitability of the products described here for any purpose or application, or to the efficiency, production rate, or useful life of these products. All estimates regarding production rates or finishes are the responsibility of the user and must be derived solely from the user's experience and expertise, not from information contained in this material.

It is possible that the products described in this material may be combined with other products by the user for purposes determined solely by the user. No representations are intended or made as to the suitability of, or engineering balance of, or compliance with regulations or standard practice of any such combination of products or components the user may employ.

This equipment is only one component of a cabinet blasting operation. Other products, such as air compressors, air filters and receivers, abrasives, equipment for ventilating, dehumidifying, or other equipment, even if offered by Clemco, may have been manufactured or supplied by others. The information Clemco provides is intended to support the products Clemco manufactures. Users must contact each manufacturer and supplier of products used in the blast operation for warnings, information, training, and instruction relating to the proper and safe use of their equipment.

clemco

©2026 Clemco Industries Corp.
One Cablecar Drive • Washington MO 63090 • Phone: 636.239.4300
customerservice@clemcoindustries.com • www.clemcoindustries.com
ALL RIGHTS RESERVED

Table of Contents

1.0 Introduction ..... page 4
Scope of Manual 1.1
General Description 1.2
Blast Machine and Controls 1.3
Nozzle Options 1.4
Reclaimer Options 1.5

2.0 Installation ..... page 5

3.0 Field Installed Accessories ..... page 5
U-Tube Manometer 3.1

4.0 Operation ..... page 5

5.0 Adjustments ..... page 5
Media Metering (media flow) 5.1
Reclaimer Static Pressure (exhaust damper) 5.2
Using the Manometer to Set Static Pressure 5.3

6.0 Preventative Maintenance ..... page 8
Inspection Notes 6.1
Daily Inspection and Maintenance Before Blasting 6.2
Check media level 6.2.1
Inspect reclaimer debris screen and door gasket 6.2.2
Drain compressed-air filter 6.2.3
Weekly Inspection and Maintenance Before Blasting 6.3
Nozzle 6.3.1
Blast hose and couplings 6.3.2
Outlet valve 6.3.3
Weekly Inspection During Blasting 6.4
Inspect blast machine plumbing for air leaks 6.4.1
Flex hoses 6.4.2
Monthly Inspection and Maintenance 6.5
Pop-up valve 6.5.1
Pop-up seal 6.5.2
Reclaimer wear plate and liners 6.5.3

7.0 Service Maintenance ..... page 9
Blast Hose and Nozzle 7.1
Tube-Lock Fittings 7.2
Replacing Reclaimer Wear Plate 7.3
Replacing or Installing Rubber Reclaimer Liners 7.4
Removing or Replacing Reclaimer Inlet Baffle 7.5
Pop-Up Valve Replacement 7.6
Pop-Up Valve Seal Replacement 7.7
Diaphragm Outlet Valve 7.8
Metering Valve 7.9

8.0 Troubleshooting ..... page 17

9.0 Accessories & Replacement Parts ..... page 18
Optional Accessories 9.1
1” Diaphragm Outlet Valve 9.2
Blast Machine 9.3
Reclaimer, 600 cfm 9.4
Reclaimer Liners 600 cfm 9.5
Reclaimer, 900 cfm 9.6
Reclaimer Liners 900 cfm 9.7
Lightweight Media Blast Machine 9.8

Safety Alerts Key

This is the safety alert symbol. It is used to alert you to potential physical injury hazards. Obey all safety messages that follow this symbol to avoid possible injury or death.

NOTICE

Notice indicates information that is considered important, but not hazard-related, if not avoided, could result in property damage.

CAUTION

Caution indicates a hazardous situation that, if not avoided, could result in minor or moderate injury.

WARNING

DANGER

Warning and Danger, indicates a hazardous situation that, if not avoided, will result in death or serious injury.

1.0 | Introduction

1.1 | Scope of Manual

1.1.1 | These instructions cover maintenance, optional accessories, and replacement parts for the following Series Suction Reclaim Modules:

- 300cfm Pressure Module with Standard Controls (Non-Ferrous, Steel, & Lightweight)
- 600cfm Pressure Module with Standard Controls (Non-Ferrous, Steel, & Lightweight)
- 900cfm Pressure Module with Standard Controls (Non-Ferrous, Steel, & Lightweight)

1.1.2 | The instructions contain important information required for safe operation of this equipment. Before using the equipment, all personnel associated with their operation must read this entire manual and all accessory manuals to become familiar with the cabinets' operation, parts, and terminology.

1.4 General Description

1.4.1 | The Reclaim Module provides efficient cleaning of the media for reuse. Efficiency rates are influenced by media type, media size, and airflow across the reclaim. All Pressure Reclaim modules consist of five major components.

1. Reclaim
2. Stand
3. Air Prep Unit
4. Blast Machine
5. Control Panel

1.5 Blast Machine and Controls

1.5.1 | Clemco certifies its blast machines (pressure vessels) to conform to the ASME (American Society of Mechanical Engineers) Boiler and Pressure Vessel Code, Section VIII, Division 1. It is the owner's responsibility to maintain the integrity of the vessel in accordance with state regulations. Regulations may include regular inspection and hydrostatic testing as described in National Board inspection code and jurisdictional regulations and/or laws.

⚠ WARNING

Welding, grinding, or drilling on the blast machine can weaken the vessel. Compressed-air pressure can cause a weakened blast machine to rupture, resulting in death or serious injury. Welding, grinding, or drilling on the vessel without a National Board R Stamp voids the Clemco ASME certification.

1.5.2 | All welding repairs to the vessel must be performed by certified welders at shops holding a National Board R Stamp. Welding performed by any welder not properly qualified per the ASME code voids the Clemco ASME certification.

1.5.3 | Do not exceed the maximum working pressure rating (PSI) of the blast machine. The maximum pressure rating is stamped into the ASME nameplate, which is welded to the side of the vessel.

⚠ WARNING

Excessive compressed-air pressure can cause a blast machine to rupture. To prevent serious injury or death, do not exceed the rated pressure of the blast machine.

1.5.4 | OSHA does not require pressure-relief valves on blast machines when air compressors supplying air to the blast machines are built to American Society of Mechanical Engineers Boiler and Pressure Vessel Code, Section VIII, Division 1 and comply with OSHA regulation 29 CFR 1910.169, which refers to the ASME code when describing the necessity of pressure-relief valves on compressed-air equipment. DO NOT operate blast machines with air compressors that are not equipped with properly functioning pressure-relief valves with maximum pressure less than or equal to the maximum-allowable working pressure (MAWP) stamped on the vessel nameplate.

1.5.5 | When the cabinet is set up, the blast machine is ready to blast by actuating the foot pedal. Pressing the foot pedal opens the normally closed main inlet regulator and closes the normally open outlet valve. The incoming air pressurizes the blast machine, and blasting begins. When pressure on the foot pedal is released, the blast machine depressurizes and blasting stops.

1.6 | Nozzle Options

1.6.1 | Unless otherwise specified at the time of purchase, the cabinet is provided with a 3/16” orifice tungsten carbide nozzle. Optional 1/8” and 1/4” orifice nozzles are also available.

1.6.2 | Nozzles with an orifice larger than those recommended could cause air leakage from the cabinet and impair recovery from the cabinet hopper.

1.6.3 | Use boron carbide nozzles when blasting with aggressive media. Nozzles lined with boron carbide extend nozzle wear life. Refer to Section 9.1: Optional Accessories.

⚠ WARNING

All dust is hazardous to breath. Emissions can occur from the dust-collection system. Identify all materials that are to be removed by blasting. If any toxic materials, such as lead dust or dust from other heavy metals and corrosives, or any other toxic materials are being removed, use a HEPA after filter to assist in maintaining inhalation hazards below the permissible exposure limits (PELs). Prolonged exposure to any dust can result in serious lung disease and death. Short-term ingestion of toxic materials can cause serious respiratory injury or death. Filtration may not be adequate in reducing all inhalation hazards. It remains the employer’s or user’s responsibility to ensure all emissions are safe to breathe.

1.7 | Reclaimer Options

1.7.1 | Replaceable rubber reclaimer liners: Rubber liners are available for 600 cfm reclaimers. The liners prolong service life of the reclaimer and should be installed when using silicon carbide, aluminum oxide, or other aggressive media.

2.0 | Installation – See Start Up Guide

3.0 | Field Installed Accessories

3.1 | U-Tube Manometer

The Manometer is used to measures reclaimer static pressure and optional HEPA-Filter differential pressure.

The optional manometer is listed in Section 9.1

3.1.1 | Consistent reclaimer static-pressure is necessary for precise media separation, as the reclaimer’s efficiency is achieved by a centrifugal balance of air flow, particle weight, and size. Reclaimer static pressure is set by adjusting the dust-collector exhaust damper. Refer to Section 5.3 for using the manometer to set reclaimer static pressure.

4.0 | Operation– See Start Up Guide

5.0 Adjustments

5.1 Media Metering (media flow) – Figure 1

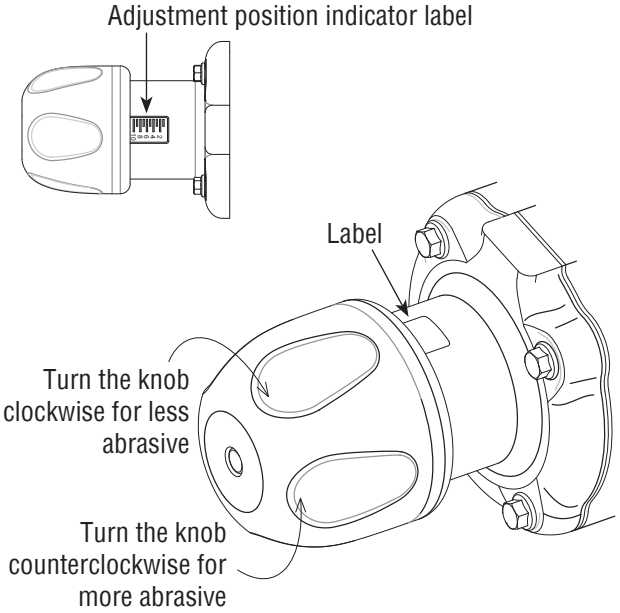

Figure 1

5.1.1 | These instructions and the illustration in **Figure 1** are for a standard cabinet with MQV Metering Valve. Optional metering valves may function differently, but the process is similar. Refer to the metering valve operations manual for the operation of the valve provided.

5.1.2 | The valve is closed when the knob is fully clockwise. Increase abrasive flow by turning the knob counterclockwise and decrease abrasive flow by turning the knob clockwise, as shown in **Figure 1**. Begin with the knob set two turns from fully closed. Increase flow by turning the knob no more than 1/4 turn counterclockwise. Allow 10 to 15 seconds for the flow to stabilize before readjusting. Continue adjusting as described until the correct flow is attained.

5.1.3 | The indicator label behind the knob shows how far the metering valve is open. When the knob is turned in or out it

moves over the label, allowing the operator to reset the valve to the same position when abrasive flow is temporarily changed.

5.1.4 | Optimum flow rate depends on the type and size of media and blasting pressure, and can best be determined by experience. Use as little media as possible while maintaining the maximum cleaning rate. Generally, with the correct mixture, media is seen as a light discoloration as it exits the nozzle.

5.2 | Reclaimer Static Pressure (exhaust damper)

5.2.1 | Static-pressure settings vary with size, weight, and type of media.

5.2.2 | Adjust static pressure by opening or closing the exhaust damper located on the dust collector outlet.

- If the damper is not opened far enough, the reclaimer will not remove fines, resulting in dusty media and poor visibility; or it will not convey media, causing media buildup in the hose between the cabinet hopper and power module.
- If the damper is opened too far, it may cause carryover (usable media carried into the dust collector) and result in excessive media consumption.
- Open only as far as necessary to obtain a balance of maximum dust removal without media carryover.

5.2.3 | A manometer (flexible U-tube) or differential-pressure gauge is useful for adjusting and monitoring static pressure. The manometer kit and differential-pressure gauge are listed in Section 9.1. Refer to Section 5.3 for manometer operations. The following are static-pressure starting points for given media. Static pressure may need to be lower with finer media, higher with coarser media. If a manometer is not available, begin with the exhaust about half open.

- Glass Bead No. 6 and 7 3-1/2” – 4”
- Glass Bead No. 8 to 12 3” – 3-1/2”
- Aluminum Oxide 60-Mesh to 80-Mesh 4” – 5”
- Aluminum Oxide 80-Mesh to 180-Mesh 3” – 4”
- Steel Shot S-110 to S-70 6” – 7”
- Steel Grit 80-Mesh to 120-Mesh 6” – 7”

5.2.4 | To adjust the damper:

1. Loosen and adjust the damper.
2. Adjust the damper to provide the static pressure noted in Paragraph 5.2.3.
3. Run the media through several blast cycles, allowing the reclaimer to function with these settings. Inspect media in the reclaimer and fines in the dust collector, as noted in Paragraph 5.2.2. Continue adjusting static pressure until optimum dust and fines removal without carryover is attained.
4. When using a manometer, make a note of the optimum setting so adjustment may be made to maintain that setting.

5.2.5 | As dust accumulates on the outer surface of the cartridge, static pressure drops, requiring one or more of the following adjustments:
- Increase pulse pressure, see Dust Collector manual.
- Decrease pulse timing (Off time), see Dust Collector manual.
- Open the damper to bring static pressure to optimum setting.

5.3 | Using the Optional Manometer to Set Reclaimer Static Pressure

NOTE: These instructions and the illustrations in **Figure 2** show two methods for taking static-pressure readings (negative pressure) on Series reclaimers. Use the method best suited for the application. The instructions explain the processes for taking occasional readings and show how to install a fitting in the reclaimer body for taking frequent readings. Taking readings at different locations could produce slightly different readings. The readings are reference points, so readings should be taken using the same method each time they are taken.

5.3.1 | Refer to instructions packed with the manometer for preparing and operating the manometer.

5.3.2 | Open both manometer valves (elbows), at the top of the manometer, per the manometer instructions.

5.3.3 | Push one end of the 3/16” ID tubing provided with the manometer, onto either one of the two valves.

5.3.4 | Attach the manometer at a convenient location, as shown in the example in **Figure 2**. Magnets on the manometer hold it onto any metal surface on the power module. The manometer must be vertical, so the fluid is level on both sides.

5.3.5 | Adjust the slide rule to align the zero with the fluid level. Refer to **Figure 3**.

5.3.6 | Setup to take occasional readings

5.3.6.1 | A needle used to take occasional readings is provided with the manometer kit. Leave the needle protector on the needle and insert the needle into the unused end of the manometer tubing. The ends of the tubing must fit tightly on the manometer and needle, as leaks will give inaccurate readings. Open the reclaimer's media fill door, remove the needle protector, and place the needle so the point is inside the door opening. Carefully close the door on the needle. The side of the needle embeds into the rubber door gasket, as shown in **Figure 2**, creating an airtight seal. Proceed to Paragraph 5.3.8 to take readings.

5.3.7 | Setup to take frequent readings

5.3.7.1 | Remove the pipe plug from the 1/4" NPT coupling located on the side of the reclaimer. Apply thread sealant to the male threads of the 1/4" NPT barb fitting provided with the manometer, and install the fitting into the coupling, as shown in **Figure 2**.

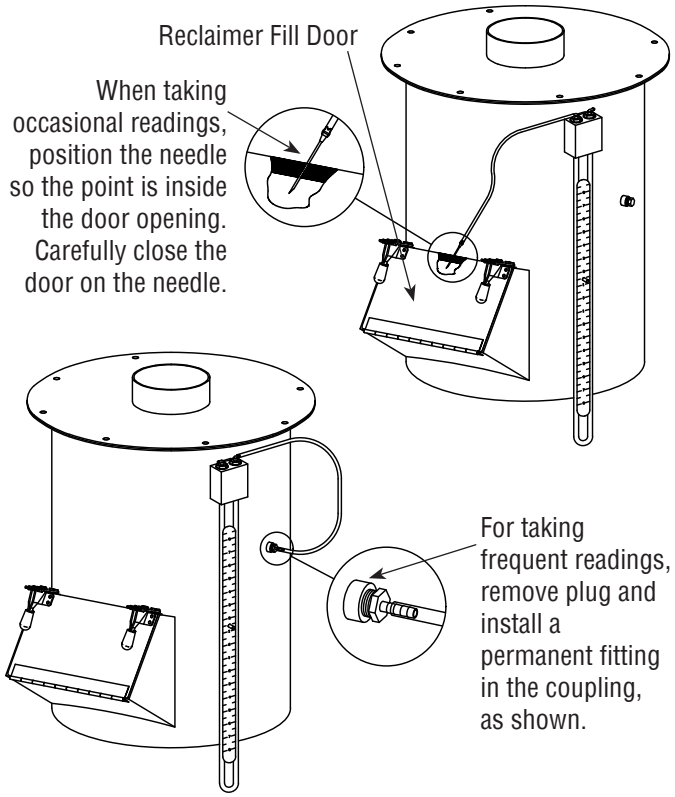

Figure 2

5.3.7.2 | Place the unused end of the manometer tubing over only the first tapered barb on the barb fitting; pushing the tubing all the way onto the barb may make it difficult to remove. Proceed to Paragraph 5.3.8 to take readings.

5.3.8 | Taking readings

5.3.8.1 | Open cabinet doors and turn the exhauster ON. The negative (static) pressure moves fluid in the tube. **NOTE:** Readings must be taken with the cabinet doors open and with the exhauster running.

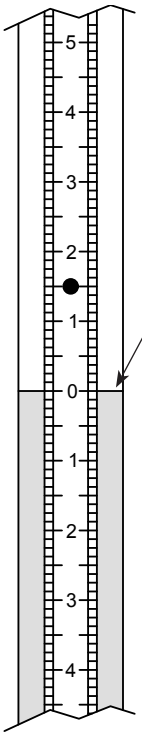

The manometer must be vertical when taking pressure readings.

With the exhauster off, slide the rule to align the zero with the fluid level.

To obtain the pressure reading: with exhauster on, add the number of inches the fluid travels up the column to the inches the fluid travels down the other column. The total is the static pressure reading.

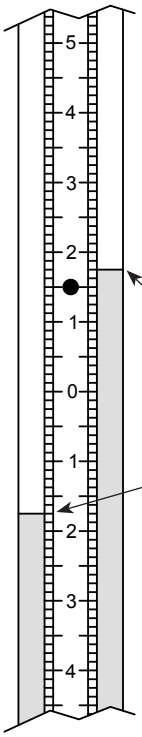

Some may find it easier to read the column by starting the exhauster and slide the zero on the rule even with either the high or the low column, the static pressure is how far the fluid travels up or down the other column.

In the example shown, fluid traveled up the right column 1-3/4", and down the left column 1-3/4". Static pressure is determined by adding the columns together. In the example, the static pressure is 3-1/2".

Figure 3

5.3.8.2 | To find the static pressure, add the number of inches the fluid travels up one column to the inches the fluid travels down the other column. Refer to the example in **Figure 3**.

5.3.9 | Adjust the exhaust damper, per Section 5.2, so the manometer matches the starting points noted in Paragraph 5.2.3.

5.3.10 | After taking readings and adjusting as needed:

5.3.10.1 | When using a needle: Replace the needle protector, close the manometer valves, and store the manometer in the original container in a clean area.

5.3.10.2 | When using a permanent fitting: The manometer may remain on the reclaimer body after both manometer valves are closed.

Or

Remove the vinyl tubing from the barbed fitting, close both manometer valves, and store the manometer in the original container in a clean area.

Place the vinyl barb cap, also provided with the manometer, over only the first tapered barb; pushing the cap all the way onto the barb may make it difficult to remove when taking later readings. Capping the fitting prevents leaks that alter the reclaimer's separation efficiency. Air drawn into the reclaimer causes carryover of good media to the dust collector.

6.0 | Preventative Maintenance

⚠ WARNING

Failure to wear an approved respirator and personal protection when servicing dust-laden areas of the cabinet and dust collector, as well as when emptying the dustbin, could result in lung disease, serious skin or eye irritation, or other health issues. Toxicity and health risk vary with type of media and dust generated by blasting. The respirator must be approved for the type of dust generated. Identify all material being removed by blasting and obtain a safety data sheet (SDS) for the blast media.

6.1 | Inspection Notes

To avoid unscheduled downtime and to improve safety, establish an inspection schedule. Inspect all parts subjected to media contact, including the nozzle, blast hose, flex hose, wear plate, and all items covered in this section. Adjust frequency of inspections as needed, based on the following:

- **Usage:** Frequently used cabinets require more maintenance and inspections than those occasionally used.
- **Type of media:** Aggressive media wears parts faster than non-aggressive media.
- **Condition of parts being blasted:** Heavily contaminated parts require more maintenance to the cabinet's media recovery system.
- **Friability of media:** Media that rapidly breaks down require more maintenance to the cabinet's media recovery system and dust collector.

6.2 | Daily Inspection and Maintenance Before Blasting with the Air OFF

6.2.1 | Check media level: Check media level through the reclaimer door and refill, as necessary, per Start Up Guide.

6.2.2 | Inspect reclaimer debris screen and door gasket: Check reclaimer debris screen for debris. The screen is accessible through the reclaimer door. With the exhauster OFF, remove the screen and empty it daily or when loading media. Empty the screen more often if part blasted causes excessive debris. Do not operate the machine without the screen in place; oversized byproduct from blasting could plug the nozzle. While the door is open, inspect the door gasket for wear or damage. Replace the gasket at the first sign of wear.

6.2.3 | Drain compressed-air filter: Empty the drain pail at least once a day, and more often if needed. Moist air inhibits the flow of media. Drain the air line and receiver tank regularly. If the filter does not remove enough moisture to keep media dry and flowing, it may be necessary to install an air dryer or after-cooler in the compressed-air supply line.

6.3 | Weekly Inspection and Maintenance Before Blasting with Air OFF

6.3.1 | Nozzle: Remove the nozzle and inspect nozzle for wear. Replace the nozzle when the orifice diameter is worn 1/16" larger than original size. Before replacing the nozzle, inspect the nozzle washer. Make sure the nozzle washer is in good condition, not worn, or otherwise damaged, and in place.

⚠ WARNING

The threads on the nozzle and nozzle holder must be inspected each time the nozzle is secured to the holder. A loose-fitting nozzle can eject under pressure and cause severe injury. Check the threads for wear and make sure the nozzle holder securely holds the nozzle. The nozzle washer must also be inspected for wear. When nozzle washers are worn or missing, media can erode nozzle threads.

6.3.2 | Blast hose and couplings

⚠ WARNING

Worn blast hose can suddenly burst while under blast pressure. Couplings and nozzle holders will not safely grip worn hose and can blow off under pressure. Compressed air and media escaping from a burst hose, or hose whipping from a disconnected coupling or nozzle holder can cause severe injury.

- Inspect blast hose for wear and soft spots by pinching it every 12 inches. Soft spots mean the hose is worn. First wear is usually along the outside radius where the hose bends just behind the nozzle holder. Replace the hose as soon as soft spots are noted.
- Make sure coupling gaskets are in good condition.
- Make sure coupling screws are fully seated in the coupling and that none are missing.
- Make sure that safety lock pins are inserted in all couplings.
- Make sure safety cables are attached at all blast-hose and air-hose connections and that all slack is removed from the cable.

6.3.3 | Outlet valve: Inspect outlet valve diaphragm, per Section 7.8. Remove the four cap screws and inspect the diaphragm. Replace the diaphragm if worn or cracked. Continued use with a warn diaphragm will quickly wear the valve casting.

6.4 | Weekly Inspection During Blasting – Have Someone Do the Following:

6.4.1 | Inspect blast machine plumbing for air leaks: Inspect all external piping, hoses, valves, and couplings for air leaks. If leaks are found, repair immediately.

6.4.2 | Flex hoses: Inspect flex hoses for leaks and wear.

6.5 | Monthly Inspection and Maintenance

6.5.1 | Pop-up valve: Check the urethane coating for cracks and grooves. Replace the pop-up valve at the first sign of wear, per Section 7.6.

6.5.2 | Pop-up seal: Inspect the rubber pop-up seal and replace at the first sign of wear, drying, or cracking, per Section 7.19.

6.5.3 | Reclaimer wear plate and liners: Remove the flex hose from the reclaimer inlet and use a light to inspect the reclaimer wear plate or optional rubber reclaimer liners for wear. If the rubber is worn through to the backing metal, replace the wear plate per Section 7.3 or the rubber liners, as necessary, per Section 7.4.

7.0 | Service Maintenance

⚠ WARNING

Prior to doing any maintenance or opening the dust collector, the employer must meet required OSHA standards, including but not limited to 29 CFR 1910 for:

- **Appropriate Respirator**
- **Protective Clothing**
- **Toxic and Hazardous Substances**
- **Fall Protection**
- **Lockout and Tagout**

All dust is hazardous to breath; toxicity and health risks vary with type of dust generated by blasting. Prolonged exposure to any dust can result in serious lung disease and death. Short-term exposure to toxic materials, such as lead dust or dust from other heavy metals and corrosives, can cause serious injury or death. Identify all material that is being removed by blasting and obtain a Safety Data Sheet (SDS) for the blast media. Waste dust in the collector can cause serious injury or death through inhalation, absorption, or ingestion. The employer shall meet all OSHA requirements, including but not limited to those for confined space, combustible dust, fall protection, hazard communication, and lockout and tagout procedure for electrical and pneumatic supply.

Figure 4

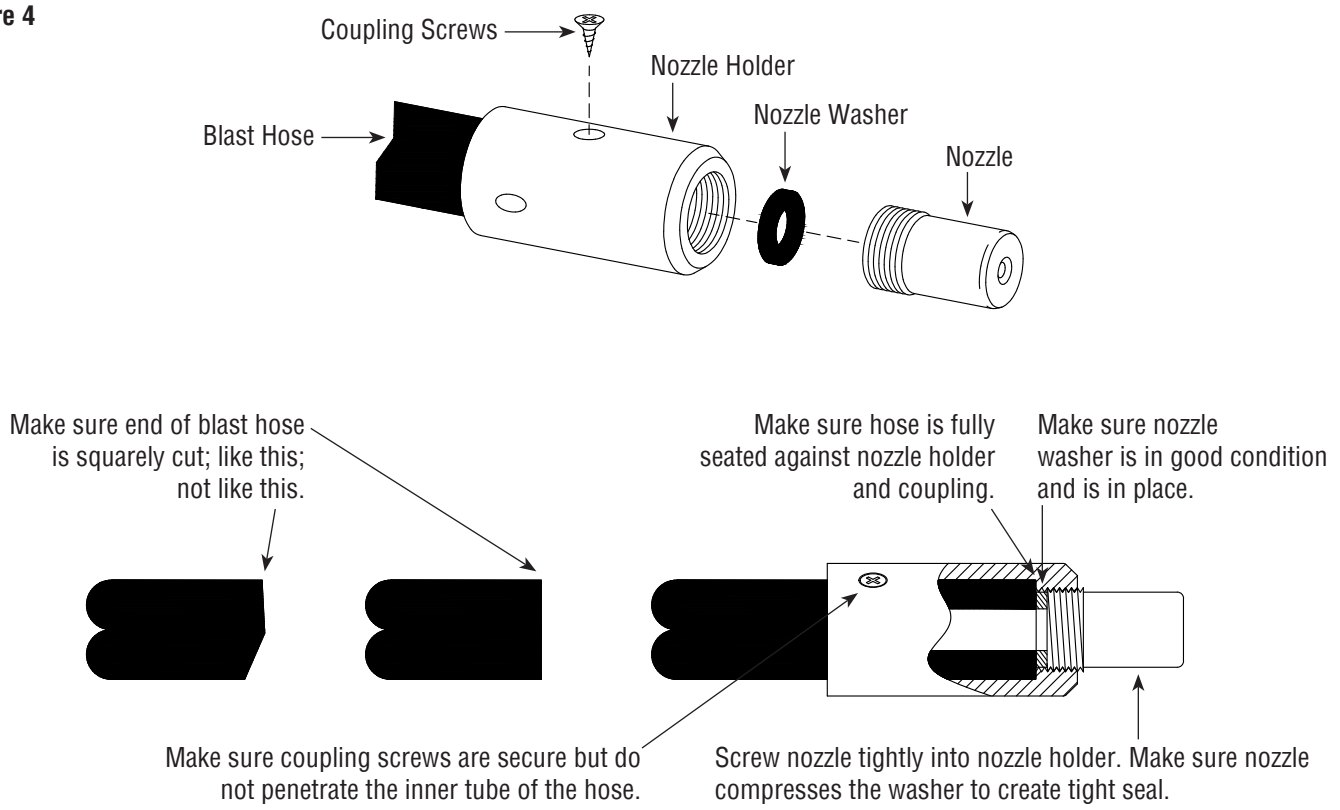

7.1 | Blast Hose and Nozzle – Figure 4

7.1.1 | To remove old blast hose, disconnect hose from blast machine and remove nozzle holder or coupling. Spray outside of hose with a liberal amount of silicone spray or similar lubricant to reduce friction, and then pull the hose through the hopper grommet. Install new hose and couplings in reverse order.

7.1.2 | When replacing blast hose, make sure the hose is square cut and that it is fully inserted into the nozzle holder and coupling until it sits tightly against the shoulder in the holder and coupling, as shown in **Figure 4**. Make sure correctly-sized screws are used to secure the nozzle holder and blast-hose coupling. Screws should not penetrate through to the inside of the blast hose.

7.1.3 | Replace the nozzle when the orifice (its smallest inside diameter) has increased by 1/16” or sooner if blast pressure noticeably diminishes. Make sure the nozzle washer is in good condition and in place before screwing the nozzle into the nozzle holder. Make sure the nozzle is screwed tightly into the nozzle holder; if the nozzle is not tight against the nozzle washer, thread erosion will occur, and the nozzle will fuse to the nozzle holder.

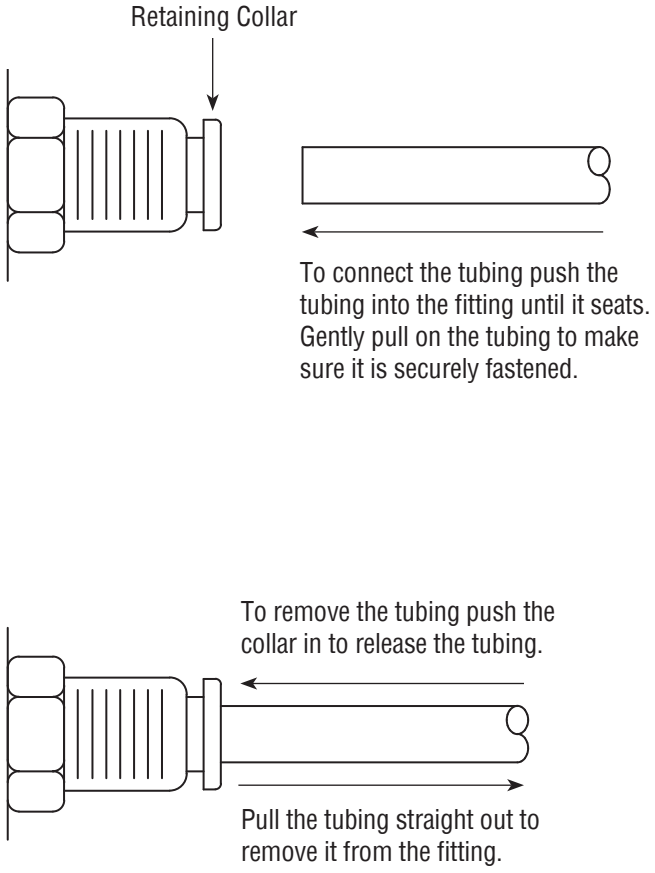

Figure 5

7.2 | Tube-Lock Fittings – Figure 5

⚠ WARNING

Failure to observe the following procedure before performing any maintenance can cause injury from the sudden release of trapped compressed air.

- **Lockout and tagout the compressed-air supply.**
- **Bleed all compressed air-supply lines.**

7.2.1 | To remove the tubing, push the retaining collar toward the fitting, which releases the tubing so it can be easily removed by pulling it out. Do not force it; only a slight pull on the tubing is required if the retaining collar is pushed in correctly.

7.2.2 | Reconnect the tubing by inserting it through the collar until it seats. Tug on the tubing to make sure it is secured.

7.3 | Replacing Reclaimer Wear Plate – Figure 6

Installation Notes: The reclaimer wear plate may be replaced by removing the top as explained in this section. Make sure replacement gasket is available to replace compressed or damaged gaskets on the reclaimer's upper flange and inlet pipe.

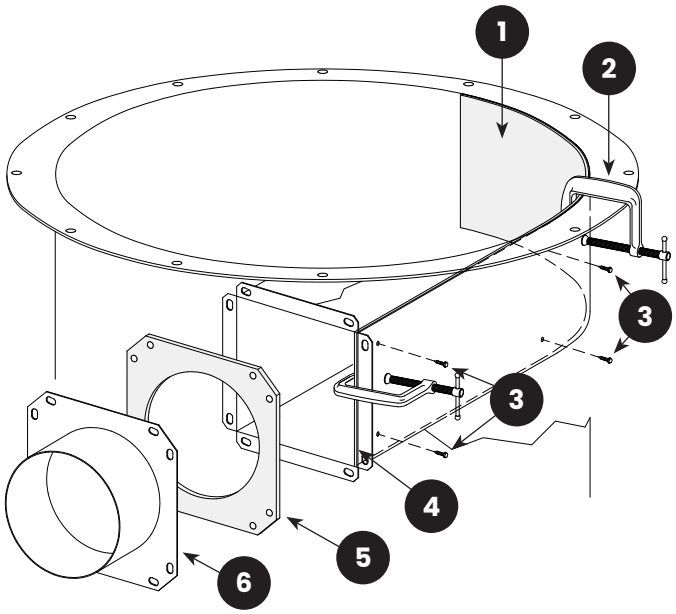

FIGURE 6: (1) Wear Plate; (2) Clamp; (3) Screws; (4) Align leading edge and clamp where needed; (5) Inlet-pipe gasket during reassembly replace if worn; (6) Inlet-Pipe Adaptor

7.3.1 | Remove the flex hose from the reclaimer inlet.

7.3.2 | Unbolt the reclaimer top and remove the top.

7.3.3 | Remove the reclaimer inlet-pipe adaptor, adaptor gasket, and old wear plate. The wear plate is held in place by screws attached from the outside of the reclaimer. Remove the screws and pull out the wear plate through the top.

7.3.4 | Remove remnants of old caulk from the reclaimer wall or top that will prevent the new wear plate from seating against them.

7.3.5 | Angle the new wear plate into the reclaimer inlet and position it so the straight end is flush with the inlet. Use locking pliers, clamps, or other means where needed to pry the wear plate against the side of the inlet and inner wall. Make sure the leading edge of the wear plate is aligned with the reclaimer inlet and that the top edge is even with the top of the reclaimer.

7.3.6 | New self-drilling sheet metal screws are provided with the wear plate. Match drill through each old screw hole into the wear plate to secure. Rearrange the clamp(s) as needed to press the wear plate against the reclaimer wall when installing screws.

7.3.7 | Replace the upper flange gasket and reattach the reclaimer top.

7.3.8 | To avoid rapid wear, apply RTV caulk to fill gaps at the seams on the top, bottom, and leading edge of the wear plate.

7.3.9 | Use a new inlet gasket and reattach the inlet-pipe adaptor.

7.3.10 | Allow time for the caulking to cure before putting the reclaimer into service.

7.4 | Replacing or Field Installing Optional Rubber Reclaimer Liners in a Reclaimer

The reclaimer must be designed to accept liners and have a removable top, as shown in **Figure 7**.

⚠ WARNING

To replace or install liners, the reclaimer must be removed from the power module. Lined reclaimers weigh approximately 160 lbs. When removing and installing the reclaimer, it must be adequately supported and secured to appropriate lift equipment. Failure to secure and use proper lift device can result in injury.

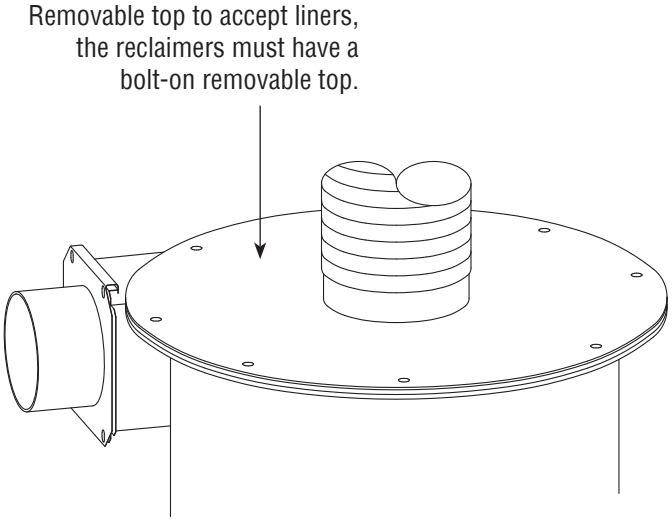

Figure 7

Installation Notes:

- Make sure replacement gasket is available to replace compressed or damaged gaskets on the reclaimer's lower flange and inlet pipe.
- The inner cone and cone ring are glued in place. Make sure a multipurpose contact adhesive, such as 3M® No. 10 neoprene contact adhesive or equal, is available.

7.4.1 | Remove the flex hoses from the reclaimer inlet and outlet and then remove the inlet-pipe adaptor.

7.4.2 | Make a note of the reclaimer's alignment; the reclaimer door is facing the power module's open side. The reclaimer must be reinstalled facing in the same direction.

7.4.3 | Remove the fasteners securing the lower reclaimer flange to the reclaim stand.

7.4.4 | Remove the reclaimer from the reclaim stand.

7.4.5 | Place a couple of bolts through the blast machine flange and stand to hold the blast machine in place.

7.4.6 | Set the reclaimer top-side-up on a clean, flat, level surface.

7.4.7 | Remove the bolts and nuts, securing the reclaimer top, and then remove the top (and top liner and cylinder liner if the reclaimer is currently lined), as shown in **Figure 8**.

7.4.8 | If the reclaimer is currently unlined, begin at the installation note preceding Paragraph 7.4.15.

7.4.9 | To remove the top liner and cylinder liner, grind the tack welds from the bottom of the cylinder liner that secure the liner to the tube, and then slide the cylinder liner and top liner off the inner tube.

7.4.10 | Remove the nuts and washers located along the right side of the inlet and remove the lined baffle through the top of the reclaimer, as shown in **Figure 8**.

7.4.11 | Remove the screws holding the inlet side liner and inlet top liner, and remove both liners from the reclaimer inlet, as shown in **Figure 9**.

7.4.12 | The wall liner is held in place with self-drill/tap screws. From the outside of the reclaimer, remove the screws and lift the wall liner from the top of the reclaimer.

7.4.13 | The cone liner and cone-ring liner, shown in **Figure 10**, are glued onto the inner cone. Pull off the liners to remove them.

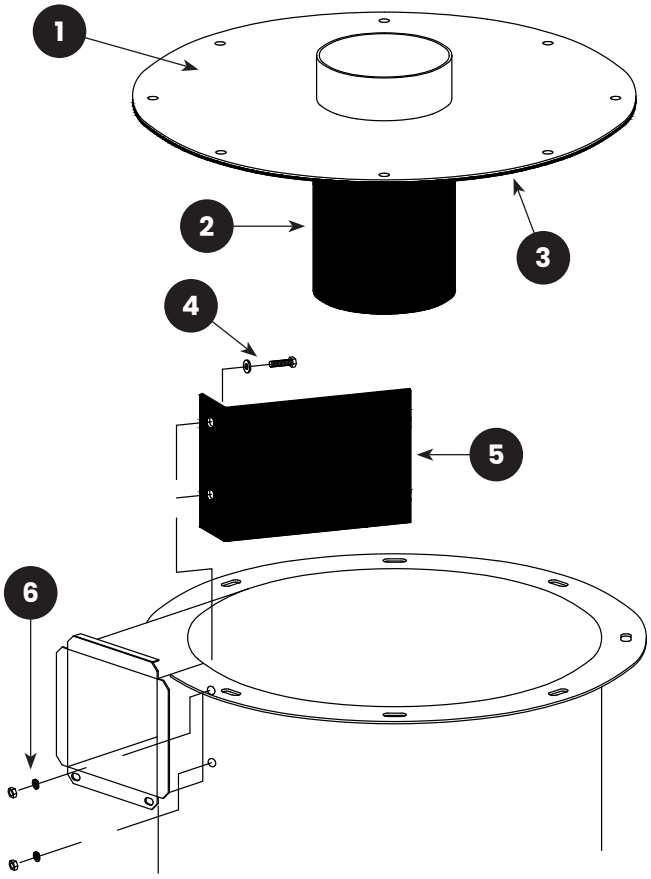

FIGURE 8: (1) Reclaimer Top; (2) Cylinder Liner; (3) Top Liner; (4) Baffle Bolts and Flat Washers; (5) Lined Baffle; (6) Baffle Nuts and Lock Washers

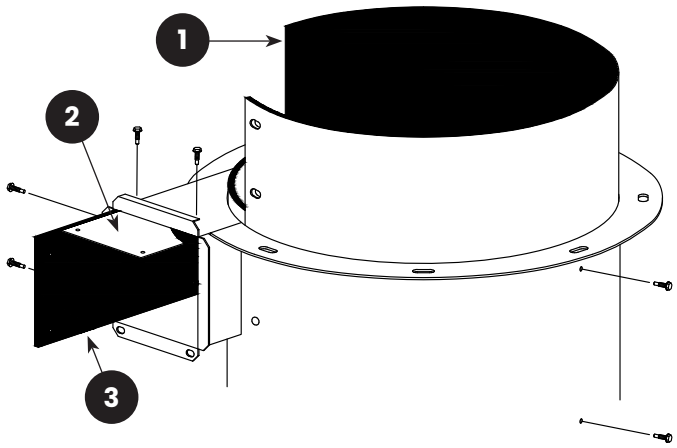

FIGURE 9: (1) Wall Liner; (2) Inlet-Top Liner; (3) Inlet-Side Liner

7.4.14 | Remove all old caulking and adhesive from the weldment.

Installation Note: The numbers in parentheses (-) shown in **Figure 11** and in the following applicable paragraphs show the recommended order of installation. When installing the liners, make sure that seams are aligned. The final assembly must be smooth and free of protrusions, edges, and gaps. Any edges disrupt the air flow, causing wear, and affect the reclaimer's media-cleaning efficiency.

7.4.15 | (1st) Place the cone-ring liner on the inside of the cone-ring; check fit and trim if needed. Refer to the instructions provided with the adhesive; some adhesives need to be applied to both contact surfaces. Apply a multipurpose contact adhesive, such as 3M® No. 10 neoprene contact adhesive or equal to the fabric side of the liner and install the liner. Smooth out the liner to eliminate air pockets.

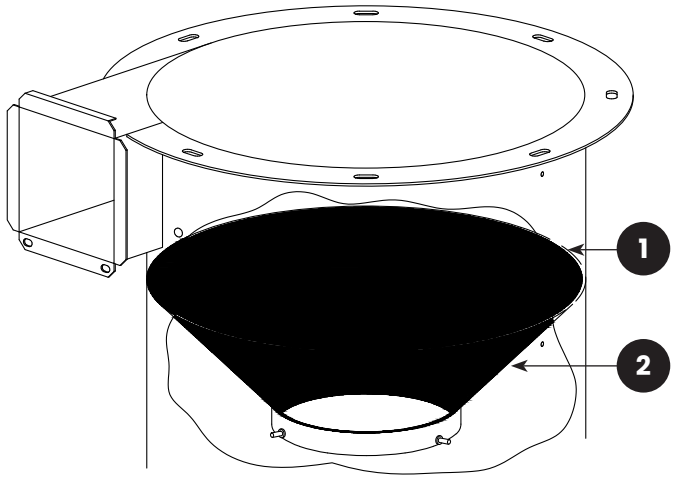

FIGURE 10: (1) Cone Liner; (2) Cone-Ring Liner

7.4.16 | (2nd) Place the cone liner in the cone with the fabric side down, and check the fit and trim if necessary. Apply contact adhesive to the fabric side of the liner and install the cone liner. Smooth out the liner to eliminate air pockets.

7.4.17 | (3rd) Place the inlet side-liner (metal side toward the side wall) against the side of the inlet housing. Center the side liner and align the front edge of the liner with the front of the housing. Temporarily clamp the side liner in place.

7.4.18 | (4th) Align the wall liner cutout with the reclaimer inlet housing and lower the liner into the reclaimer. Temporarily insert the baffle bolts through the liner and reclaimer holes to position that side of the wall liner. Clamp the wall liner in place, while adjusting it to make sure it is flush with the top of the reclaimer body and that the inlet side liner is aligned with the side-liner cutout. Reposition the inlet side liner as needed.

While pushing or clamping the liner against the weldment, secure the wall liner with self-drill/tap screws at each existing hole location. **NOTE:** To field install a new, first-time wall liner, use self-drill/tap screws to secure it at the seam and an inch or two from the top and bottom at each quadrant.

7.4.19 | (5th) Remove the temporary baffle bolts and install the lined baffle by inserting bolts and flat washers from the inside of the reclaimer and attach lock washers and nuts from the outside, leaving the baffle slightly loose.

7.4.20 | Apply silicone caulking on seams between the cone ring and cone liner to the seams on the cone ring and cone, between the cone liner and wall liner, and the seam on the wall liner. Wipe caulking to even with the liners. Voids will cause premature wear.

⚠ NOTICE

All seams between each liner must be sealed, and all seams between the liners and reclaimer weldment must be sealed. Voids cause premature wear.

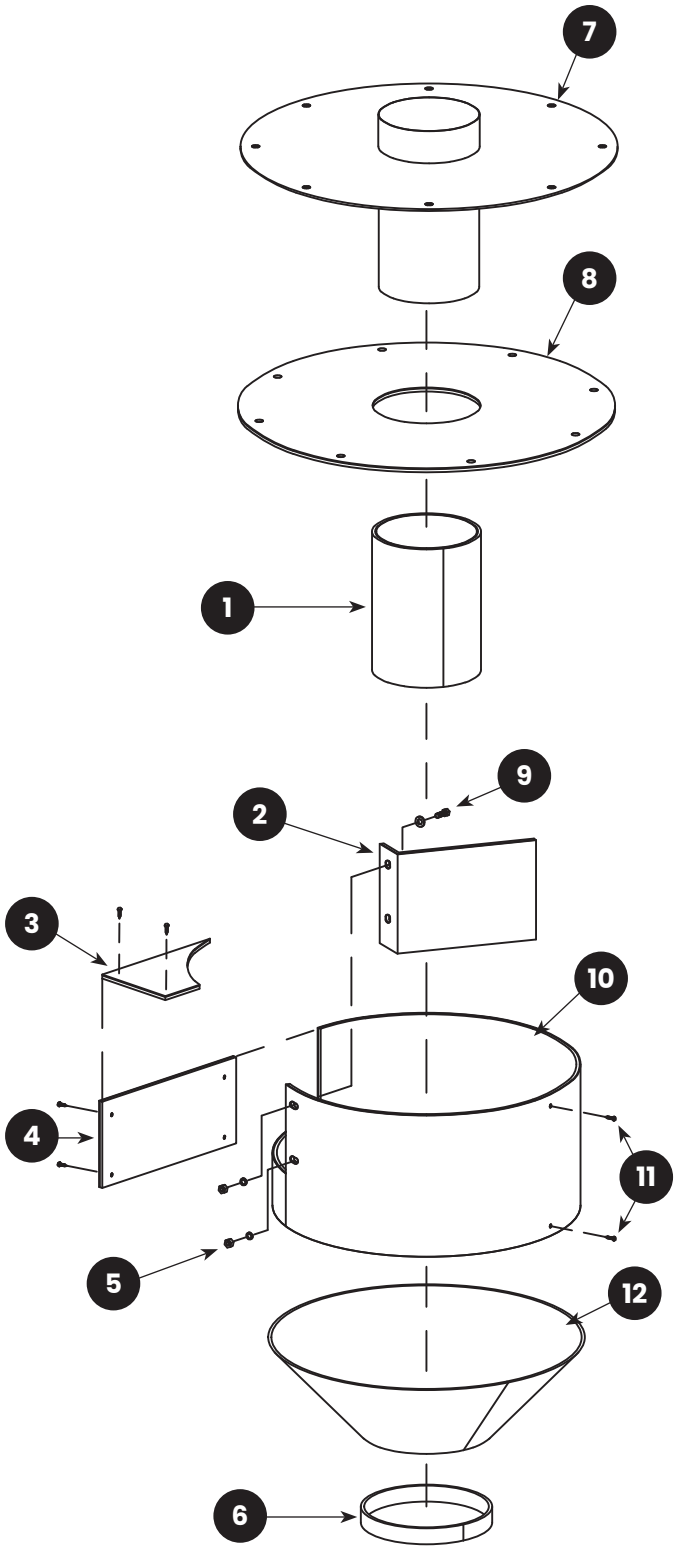

FIGURE 11: (1) Cylinder Liner (9th); (2) Lined Baffle (5th) bolts enter from inside; (3) Inlet-Top Liner (7th); (4) Inlet-Side Liner (3rd & 6th); (5) Baffle Lock Washers and Nuts; (6) Cone-Ring Liner (1st); (7) Reclaimer Top and Inner Tube (10th); (8) Top Liner (8th); (9) Baffle Bolts and Flat Washers; (10) Wall Liner (4th); (11) Self-Drill/Tap Screws; (12) Cone Liner (2nd)

7.4.21 | (6th) Use self-drilling screws to secure the inlet side liner to the side of the inlet housing. **NOTE:** To field install new, first-time inlet side liners, use self-drilling screws at each liner corner to secure. Remove the clamps after the liner is secured.

7.4.22 | (7th) Align the front edge of the inlet top liner to the front of the inlet housing and use self-drilling screws to secure. NOTE: To field install new, first-time inlet top liners, after clamping the liners use self-drilling screws at each liner corner to secure. Remove the clamps after the liner is secured.

7.4.23 | (8th) Slide the top liner onto the inner tube and align the holes in the liner with those in the top. Note that the holes around the inlet are spaced differently from the others. Temporarily install a couple of bolts to keep it in alignment.

7.4.24 | (9th) Place the cylinder liner over the inner tube. Make sure the liner is tight against the top liner and use worm clamps to temporarily clamp the liner to the tube. Tack weld the bottom of the cylinder liner to the inner tube in three or four places. Remove the clamps when the cylinder liner is secured.

7.4.25 | Apply caulking to the seam on the cylinder liner and between the cylinder liner and top liner.

7.4.26 | Apply caulking around the top edge of the wall liner and top inner edge on the inlet housing.

7.4.27 | (10th) Align the reclaimer top assembly over the top of the reclaimer and lower it into place to match the mating holes in the flange, being careful not to smear the caulking. Secure the top bolts and baffle bolts.

7.4.28 | Working through the reclaimer inlet, wipe the caulking seal smooth. Recaulk any voids.

7.4.29 | Working through the reclaimer inlet, apply silicone caulking to seal seams around the inlet side liner, inlet top liner, and reclaimer weldment. Wipe the caulking smooth.

7.4.30 | If the lower flange gasket is worn, compressed, or otherwise damaged, clean old gasket material from the flange and install new 2” strip gasket to the blast machine’s flange.

7.4.31 | Reinstall the reclaimer to the blast machine, punching holes through the flange gasket as needed to insert the fasteners.

7.4.32 | Reattach the inlet-pipe adaptor, replacing the gasket if worn, compressed, or otherwise damaged.

7.4.33 | Attach the flex hoses to the reclaimer inlet and outlet.

7.4.34 | Allow time for the caulking to cure before putting the reclaimer in service

7.5 | Removing or Replacing Reclaimer Inlet Baffle in Reclaimer with a Bolt-On Top – Figure 12

When using lightweight media such as agricultural media or very fine media (180 and finer), good media may be carried over to the dust collector. To prevent lightweight-media carryover, the inlet baffle of the reclaimer can be removed. Review the following process before beginning to make sure all parts are available:

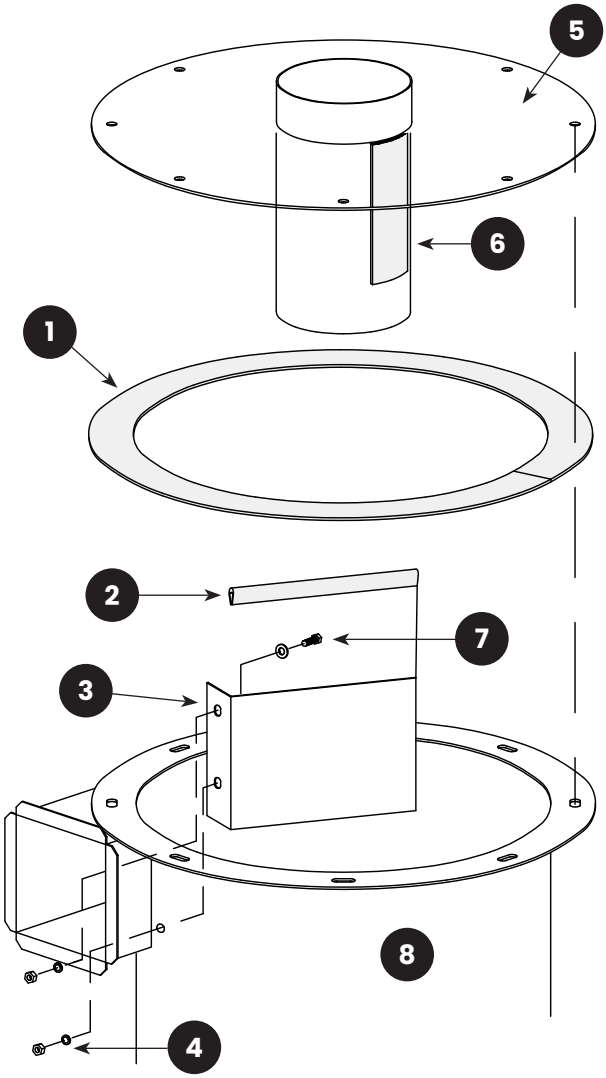

FIGURE 12: (1) 2” Strip Gasket; (2) U-Channel; (3) Baffle; (4) Baffle Nuts and Lock Washers; (5) Reclaim Top and Inner Tube (Style may vary); (6) 2” Strip Gasket; (7) Baffle Bolts and Flat Washers; (8) Reclaimer Body

Installation Notes:
Make sure at least six feet of Stock No. 13089 (2” adhesive-backed gasket) is available to replace compressed or damaged gasket on the reclaimer upper flange.

7.5.1 | Remove the flex hose from the reclaimer top.

7.5.2 | Remove the fasteners securing the reclaimer top and remove the top.

7.5.3 | Remove the two bolts securing the baffle to the side of the reclaimer inlet and remove the baffle through the top.

7.5.4 | Remove all caulking residue.

7.5.5 | If removing (not replacing) the baffle, remove the strip gasket from the inner tube and install the baffle bolts and reclaimer top. If replacing the baffle, skip to Paragraph 7.5.6.

7.5.6 | When replacing the baffle, make sure the strip gasket on the inner tube is in good condition and install the new baffle in reverse order. Apply silicone caulk to the seam (opposite side of the mounting bolts) between the baffle and reclaimer body. Wipe the caulk smooth.

7.5.7 | Inspect the strip gasket on the reclaimer upper flange; replace it if damaged or compressed.

7.5.8 | Install the reclaimer top and allow the caulking to cure before putting the reclaimer into service.

7.6 | Pop-Up Valve Replacement

7.6.1 | Empty the machine of media, per Start Up Guide.

7.6.2 | Depressurize the blast machine, and lockout and tagout the air supply.

⚠ WARNING

Failure to observe the following procedure before performing any blast machine maintenance can cause serious injury from the sudden release of compressed air:

- **Depressurize the blast machine.**
- **Lockout and tagout the compressed-air supply.**
- **Bleed the air-supply line to the blast machine.**

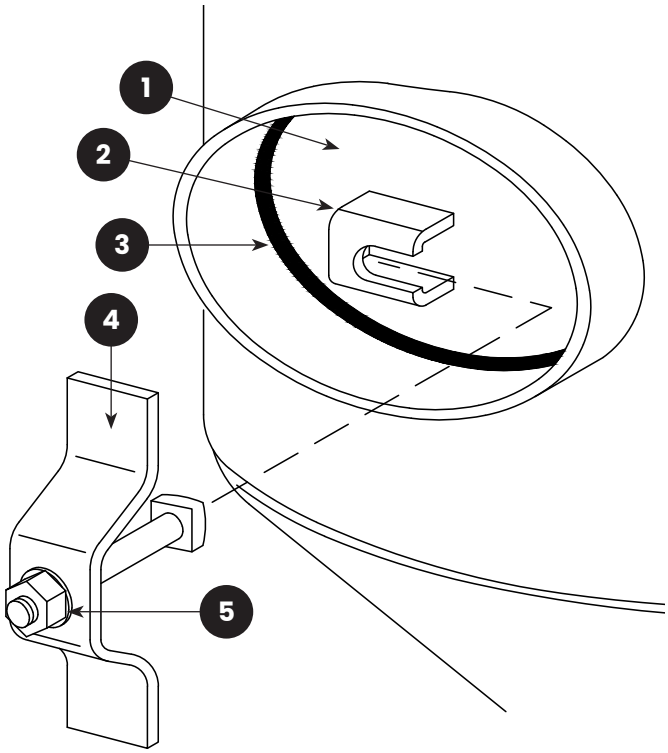

FIGURE 13: (1) Inspection Door Plate; (2) Bolt Bracket; (3) Door Gasket; (4) Inspection Door Clamp; (5) Clamp Unit

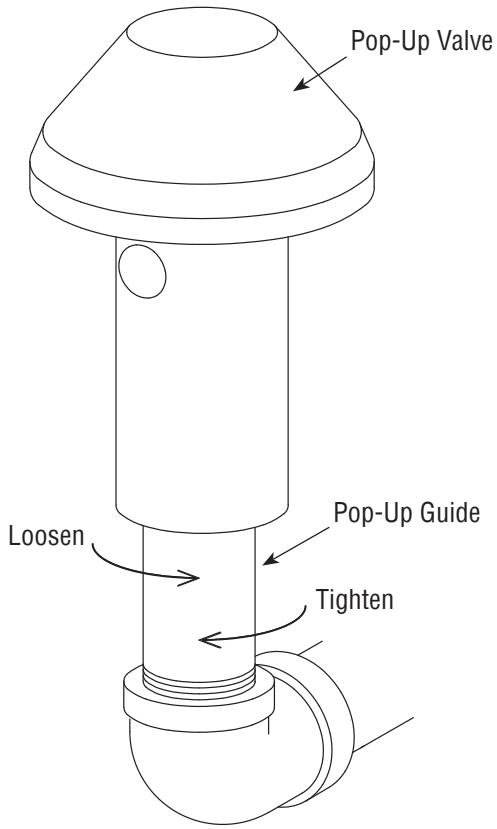

FIGURE 14

7.6.3 | To gain access to the pop-up valve, remove the inspection-door plate as follows:

1. Loosen the inspection-door clamp nut enough to slide the clamp bolt from behind the bracket. Then remove the clamp, bolt, and nut, as an assembly, as shown in **Figure 13**.
2. Push the inspection-door plate into the blast machine and rotate it so it can be removed through the inspection door. If the plate is stuck to the inspection-hole ring, tap the plate with a rubber mallet or similar tool to loosen it. Remove the door gasket if it is cracked, dry, or otherwise damaged.

7.6.4 | If the gasket requires replacement, use rubber-based glue to adhere it to the inspection-door plate. Allow the adhesive to cure before bolting the plate onto the machine.

7.6.5 | Use a short pipe wrench to unscrew the pop-up valve guide from the elbow by turning it counterclockwise, as shown in **Figure 14**. Remove the pop-up valve and guide from the machine.

7.6.6 | Slide the new pop-up valve over the guide and then screw the guide (with the pop-up valve on it) into position inside the machine. Tighten the guide wrench snug, but not wrench-tight. Over-tightening the guide will make it difficult to remove the next time the pop-up valve needs replacement.

7.6.7 | Bolt the plate onto the machine and tighten the clamp nut to approximately 55 ft lbs. Pressurize the vessel and check for air leaks. If leaks are noted, depressurize the machine, and tighten the clamp nut.

7.7 | Pop-Up Valve Seal Replacement – Figure 15

7.7.1 | The easiest method to replace the rubber pop-up seal is through the reclaimer access door. If for any reason replacement cannot be made through the reclaimer, empty media from the machine, observe the warning in Section 7.6, and bleed the air-supply line. Remove the inspection-door plate, as noted in Section 7.6.3, and work through the opening.

7.7.2 | Remove the old seal by using a finger, screwdriver, or similar object to work the seal out of the retainer groove.

7.7.3 | Push the new rubber seal all the way through the port and then fit it into the groove. For the last few inches, push on the seal and allow it to “pop” into position.

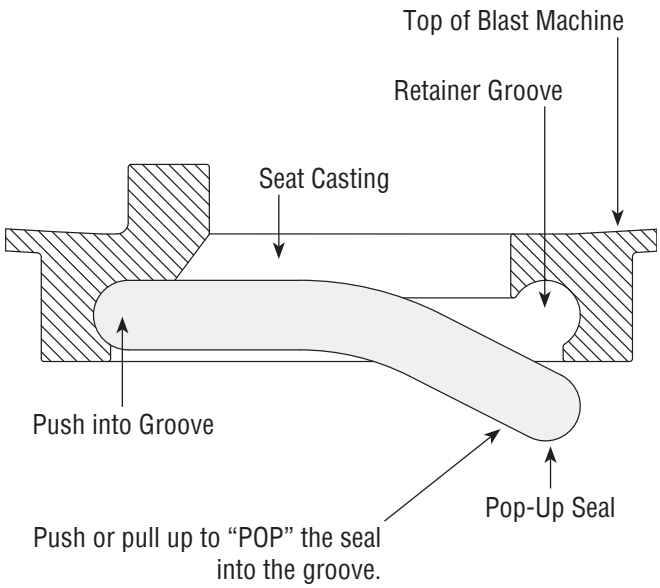

FIGURE 15

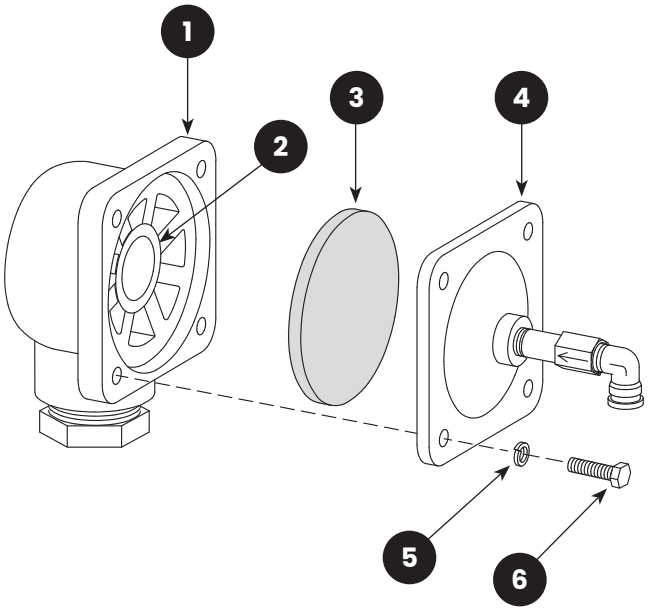

FIGURE 16: (1) Valve Body; (2) Seat; (3) Diaphragm; (4) Cap; (5) Lock Washer; (6) Cap Screw

7.8 | Diaphragm Outlet Valve – Figure 16

7.8.1 | All service on the outlet valve must be done with the air OFF and the air supply locked out and tagged out. It is not necessary to remove the valve from the blast machine.

7.8.2 | Remove the cap by unscrewing the four cap screws.

7.8.3 | Remove the diaphragm and inspect it for damage. Replace as necessary.

7.8.4 | Inspect the rounded seat in the valve body. If worn, replace the body.

7.8.5 | Reassemble in reverse order.

7.9 | Metering Valve

7.9.1 | Refer to the Media Metering Valve Owner’s Manual for service and replacement parts.

8.0 | Troubleshooting – See Troubleshooting Guide

This space is left intentionally blank.

9.0 | ACCESSORIES & REPLACEMENT PARTS *(Unless otherwise noted quantities are each.)*

9.1 | Optional Accessories

- Boron carbide lined nozzle
  - CTB-2, 1/8” orifice **21090**
  - CTB-3, 3/16” orifice **21091**
  - CTB-4, 1/4” orifice **21092**
- Manometer kit, flexible U-tube **12528**
- Lock pins (pkg of 25) for twist-on hose couplings **11203**
- Safety cable, for 1/2” to 1-1/4” OD hose **15012**
- Anti-fatigue floor-mat, 2 ft x 3 ft for front of cab. **24744**
- Window cover lens, pack of 5 ..... **06190**

9.2 | 1” Diaphragm Outlet Valve – Figure 17

(-) 1” Diaphragm outlet valve, complete **03371**
1. Nipple, 1” x close **01701**
2. Diaphragm, outlet valve **06149**
3. Washer, 1/4” lock **03117**
4. Screw, 1/4” x 1” cap **03053**
5. Cap, diaphragm outlet **03393**
6. Body, diaphragm outlet **06135**
7. Bushing, 1-1/4” x 1” **01804**

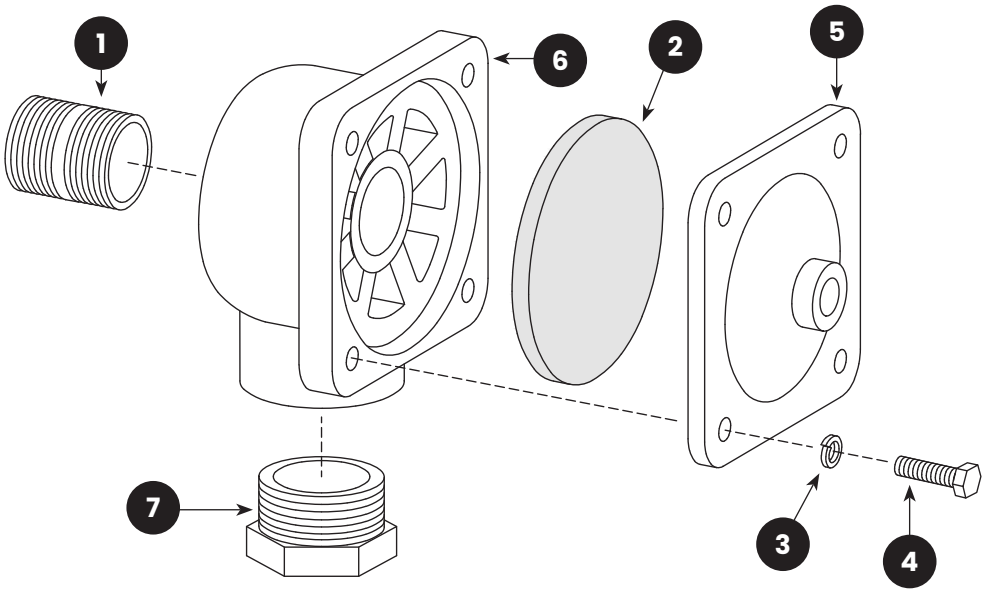

FIGURE 17

9.3 | Blast Machine – Figure 18

1. Pot Weldment **30015**
2. Pop-up valve, 4” **03699**
3. Spacer, Umbrella **02317**
4. Plate, Umbrella **02315**
5. 1/4in Flat Washer **03116**
6. 1/4in Lock Washer **03117**
7. 1/4x2.00 Hex Hd Bolt **03059**
8. Inspection door assembly, 6” x 8” **02441**
9. Gasket, 6” x 8” inspection door **02369**
10. 3/4x4.00 Sq. Hd Bolt **25357**
11. Clamp, Hand-hole **02302**
12. 3/4in Flat Washer **03816**
13. 3/4in Hex Nut **25358**
14. 1/4NPT Inline Filter **27618**
15. 1/4NPT x 3/8 Tube Fitting **11736**
16. Hose Coupling **00551**
17. 1-1/4 x 8.00 Pipe Nipple **01724**
18. MQV Metering Valve **31608**
19. 1-1/2 x 14.00 Pipe Nipple **33049**
20. 1-1/4 x 1 Pipe Bushing **01804**
21. Pusher Line **32798**
22. 1in NPT Flare Adaptor **11720**
23. 1in, 45 Deg Elbow **01782**
24. 1in Close Nipple **01701**
25. 1in Ball Valve **02429**
26. 1in Pipe Tee **01789**
27. 1in, 90 Deg Street Elbow **01775**
28. Check valve, 1” swing **12187**

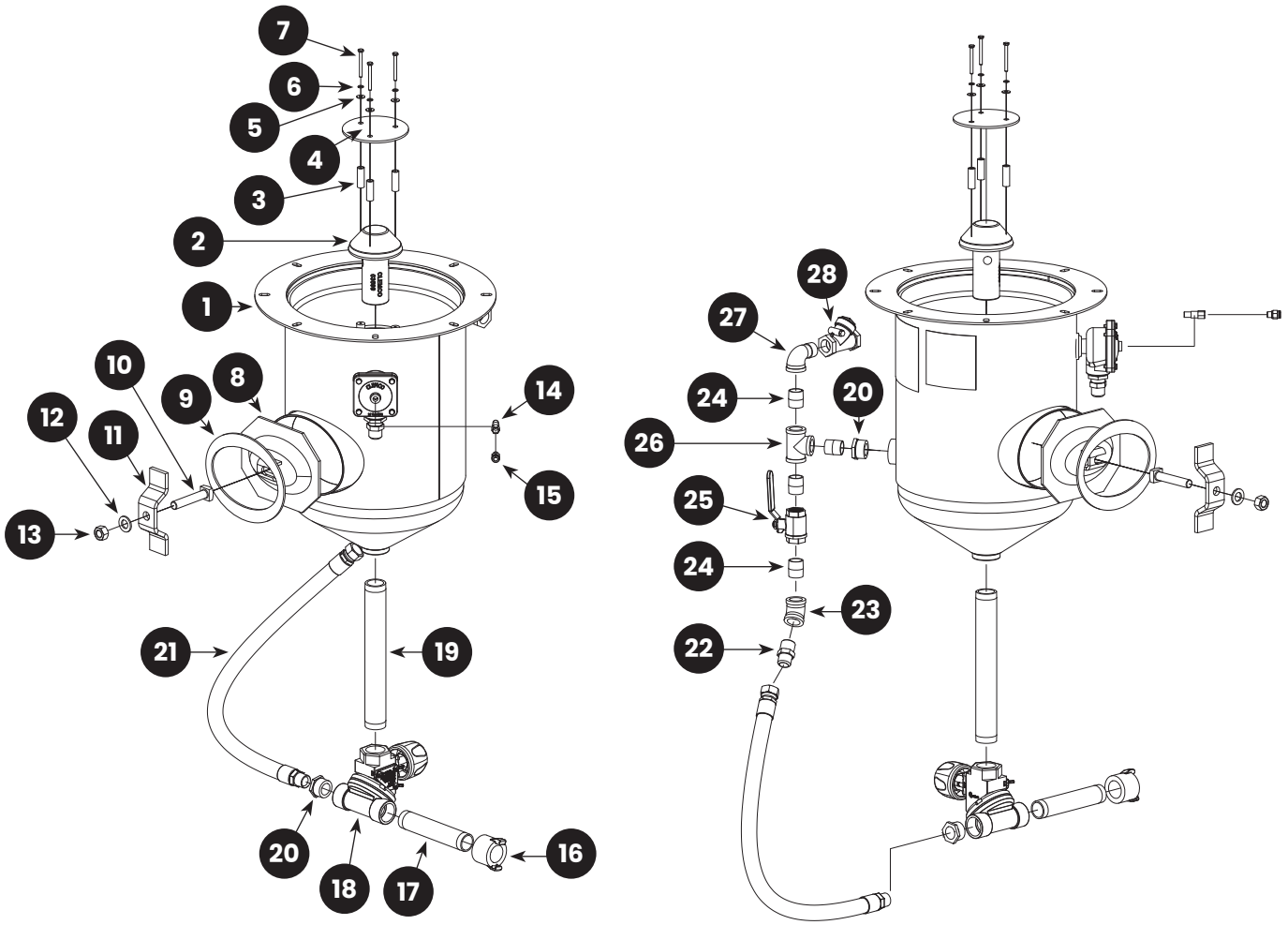

FIGURE 18

9.4 | Reclaimer, 600 CFM – Figure 19

1. Inlet-pipe adaptor
   - 5” for standard 600 cfm **29397**
   - *4” for 600 cfm w/steel media **12350**
2. Gasket, inlet-pipe adaptor
   - 5”, standard, all modular models **11779**
   - *5” rubber-lined recl. prior to 09/2018 ..... **29631**
3. Top plate, 600 cfm modular, w/6” pipe **29538**
4. Clamp, 5” hose **11578**
5. Hose, 5in Light Lined, 10ft **12467**
6. Debris screen, 8-mesh **21265**
7. Sump Pipe **23296**
8. Gasket, Sump Pipe **23259**
9. Gasket, adhesive-backed 1/8” x 2,” per foot
   - 6 feet required at each location **13089**
10. Clamp, 6” hose **00750**
11. Hose, 6” unlined flex, 10 ft required **12452**
12. Plug, 1/4-NPT pipe **01950**

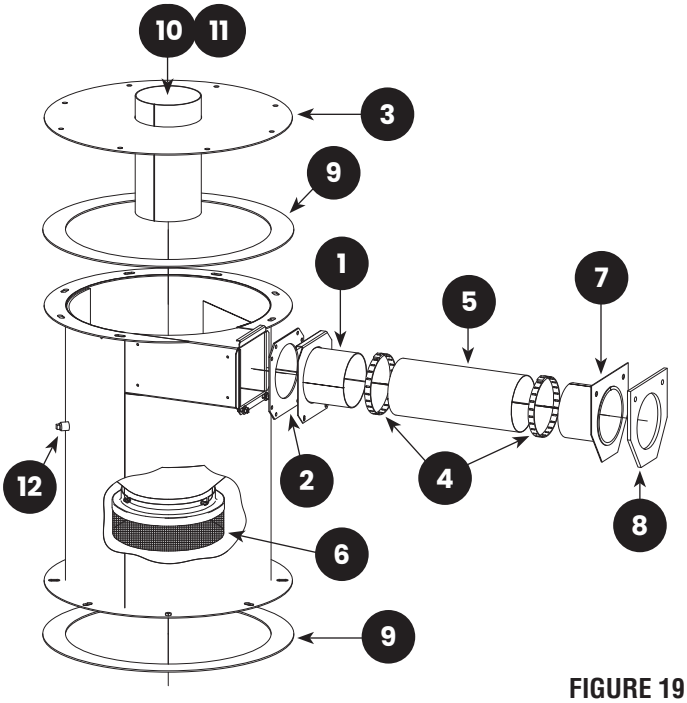

FIGURE 19

9.5 | Reclaimer Rubber Liners, 600 cfm – Figure 20

(-) Liner set, 600 cfm reclaimer **29541**
1. Top liner **29535**
2. Baffle, lined **29531**
3. Inner cylinder **29530**
4. Wall liner **29533**
5. Inlet side liner **29532**
6. Cone liner **29707**
7. Inlet top liner **29536**
8. Screw, 10-16 x 3/4” self-drill/tap **12722**

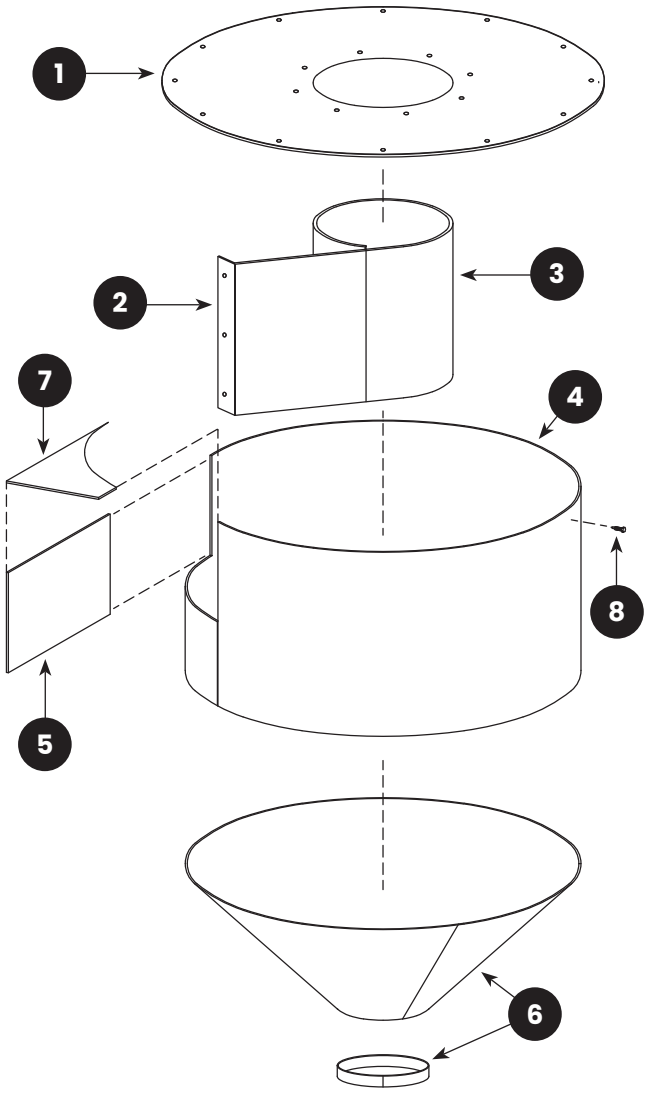

FIGURE 20

9.6 | Reclaimer, 900 CFM – Figure 21

1. Adjustable Vortex Weldment **23046**
2. 5/16x1.00 Gasket, 4ft required **00187**
3. Top Plate Weldment **23040**
4. 1/8X2.00 Gasket, 8 ft required **13089**
5. 900 Reclaim Body Weldment **33219**
6. Gasket, 900 Reclaim Inlet **11759**
7. 6in Inlet Weldment, 900 Reclaim **12357**
   - 5” for 900 cfm w/steel media **14411**
8. Hose Clamp **11576**
9. 6in Light Lined Flexhose, 10ft required **12468**
10. Sump Pipe Weldment
    - 6” for standard 900 cfm **23297**
    - 5” for 900 cfm w/steel media **23296**
11. Gasket, Sump Pipe
    - 5”, standard, all modular models **23259**
12. Reclaim Sump Adaptor Weldment **33221**

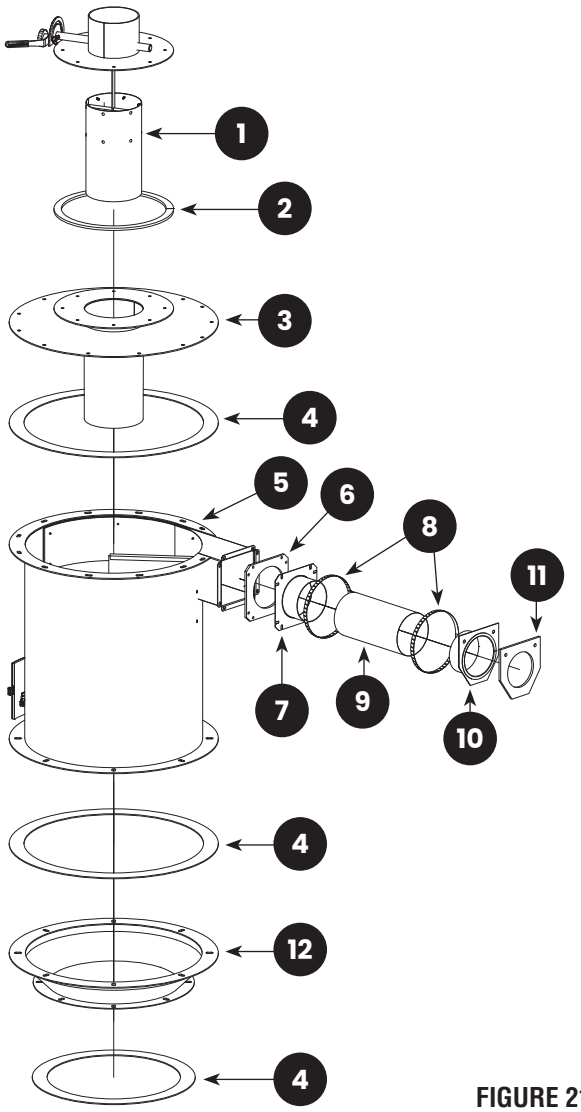

FIGURE 21

9.7 – Reclaimer Rubber Liners, 900 cfm – Figure 22

(-) Liner set, 600 cfm reclaimer **23151**
1. Top liner **23059**
2. Baffle, lined **13694**
3. Inner cylinder **24203**
4. Wall liner **17008**
5. Inlet side liner **12830**
6. Cone liner **16070**
7. Inlet top liner **22827**
8. Screw, 10-16 x 3/4” self-drill/tap **12722**

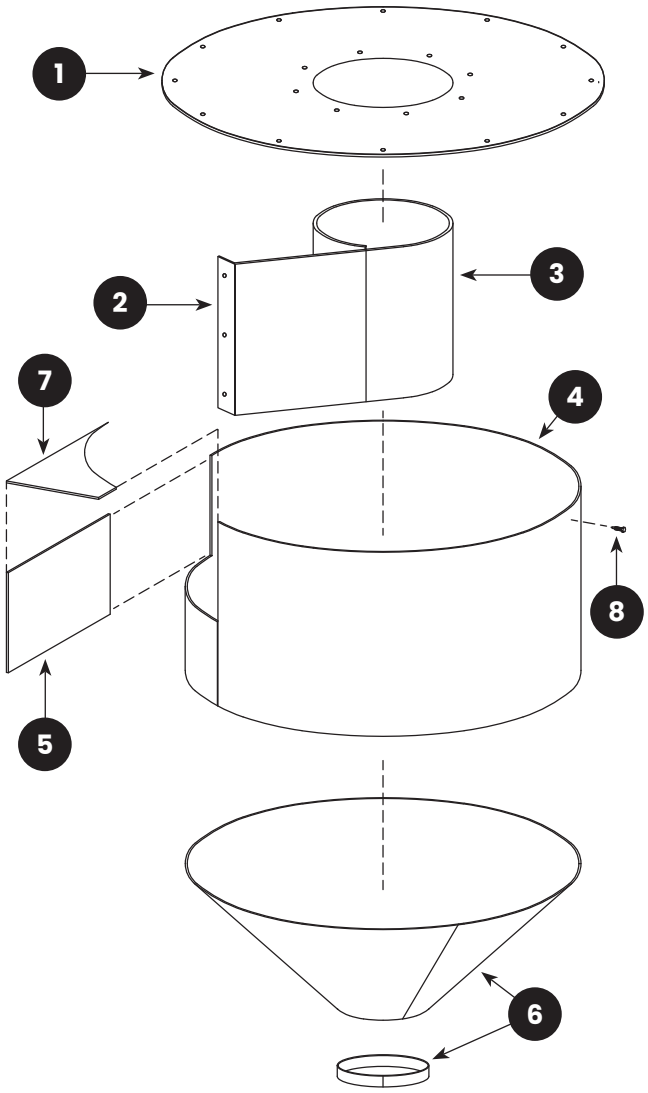

FIGURE 22

This space is left intentionally blank.

9.8 – Lightweight Media Blast Machine – Figure 23

1. Pot Weldment **33033**
2. Pop-up Valve, 4” **33033**
3. Spacer, Umbrella **02317**
4. Plate, Umbrella **02315**
5. 1/4in Flat Washer **03116**
6. 1/4in Lock Washer **03117**
7. 1/4x2.00 Hex Hd Bolt **03059**
8. Inspection door assembly, 6” x 8” **02441**
9. Gasket, 6” x 8” inspection door **02369**
10. 3/4x4.00 Sq. Hd Bolt **25357**
11. Clamp, Hand-hole **02302**
12. 3/4in Flat Washer **03816**
13. 3/4in Hex Nut **25358**
14. 1/4NPT Inline Filter **27618**
15. 1/4NPT x 3/8 Tube Fitting **11736**
16. Hose Coupling **00551**
17. 1-1/4 x 3.00 Pipe Nipple **01719**
18. 1-1/4 Wye Pipe Fitting **01818**
19. 1-1/2 x 3.00 Pipe Nipple **20230**
20. 1-1/4 x 1 Pipe Bushing **01804**
21. Pusher Line **32798**
22. 1in NPT o Flare Adaptor **11720**
23. 1in, 45 Deg Elbow **01782**
24. 1 in Close Nipple **01701**
25. 1in Ball Valve **02429**
26. 1in Pipe Tee **01789**
27 1in, 90 Deg Street Elbow **01775**
28. Check valve, 1” swing **12187**
29. FSV Metering Valve **23484**
30. 1-1/4x5.00 Pipe Nipple **01721**

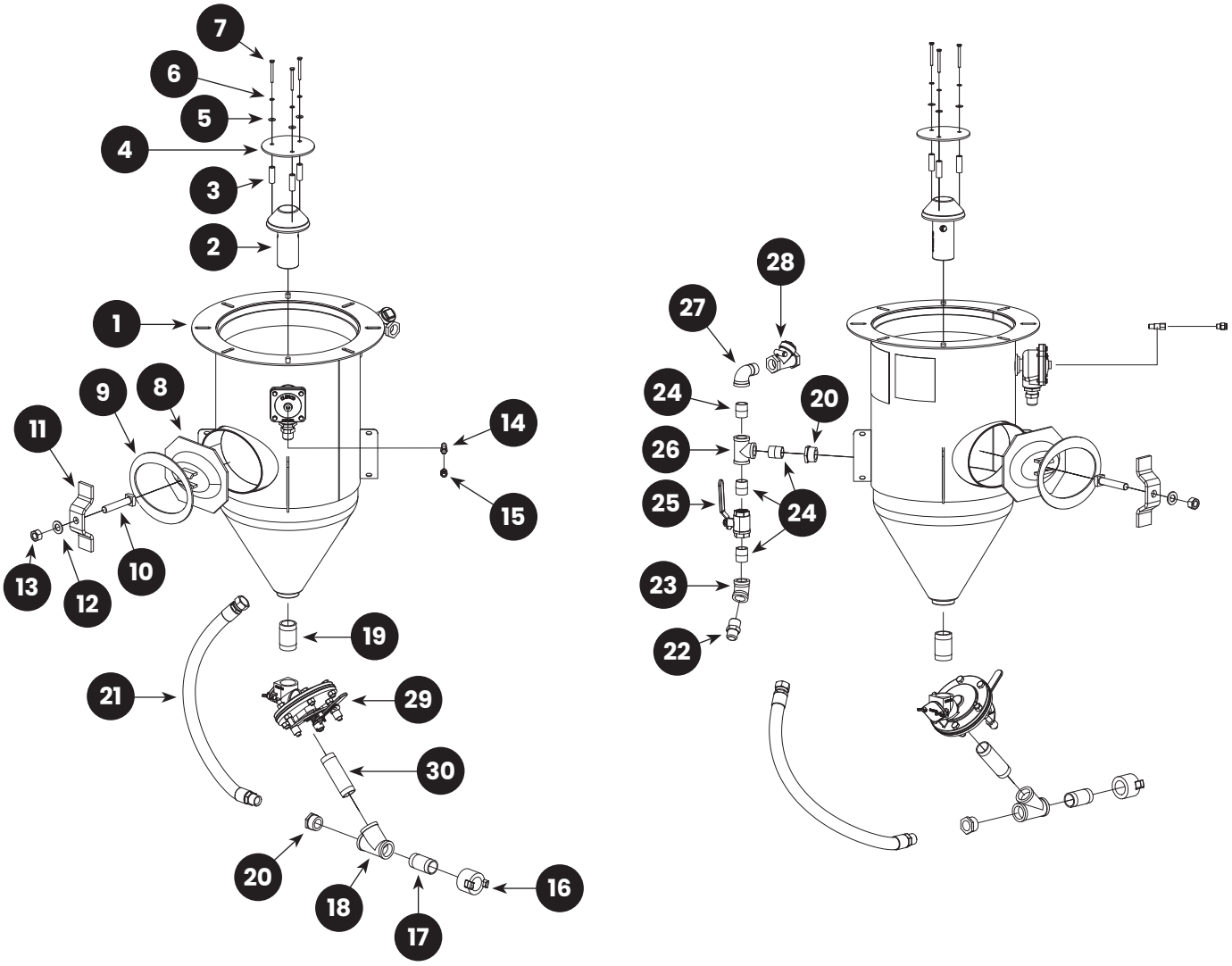

FIGURE 23

This space is left intentionally blank.

clemco

PRESSURE RECLAIM

CM 32561

©2026 Clemco Industries Corp.
One Cablecar Drive • Washington MO 63090 • Phone: 636.239.4300
customerservice@clemcoindustries.com • www.clemcoindustries.com
ALL RIGHTS RESERVED