Pulsar® Plus 55-S
Suction Blast Cabinets
O. M. 30423

DATE OF ISSUE: 10/26
REVISION: A

NOTICE TO PURCHASERS AND USERS OF OUR PRODUCTS AND THIS INFORMATIONAL MATERIAL

Clemco proudly provides products for the abrasive blast industry and is confident that industry professionals will use their knowledge and expertise for the safe and efficient use of these products.

The products described in this material and the information relating to these products are intended for knowledgeable, experienced users. It is the responsibility of the employer to ensure that proper training of operators has been performed and a safe work environment is provided.

No representation is intended or made as to the suitability of the products described here for any purpose or application, or to the efficiency, production rate, or useful life of these products. All estimates regarding production rates or finishes are the responsibility of the user and must be derived solely from the user's experience and expertise, not from information contained in this material.

It is possible that the products described in this material may be combined with other products by the user for purposes determined solely by the user. No representations are intended or made as to the suitability of, engineering balance of, or compliance with regulations or standard practice of any such combination of products or components the user may employ.

This equipment is only one component of a cabinet blasting operation. Other products, such as air compressors, air filters and receivers, abrasives, equipment for ventilating or dehumidifying, or other equipment, even if offered by Clemco, may have been manufactured or supplied by others. The information Clemco provides is intended to support the products Clemco manufactures. Users must contact each manufacturer and supplier of products used in the blast operation for warnings, information, training, and instruction relating to the proper and safe use of their equipment.

© 2021 CLEMCO INDUSTRIES CORP.
One Cable Car Dr.
Washington, MO 63090
Phone (636) 239-4300
Fax (800) 726-7559
Email: info@clemcoindustries.com
www.clemcoindustries.com

ZERO Blast Cabinets®

1.0 INTRODUCTION

1.1 Scope of Manual

1.1.1 These instructions cover setup, operation, maintenance, troubleshooting, optional accessories, and replacement parts for the Pulsar® Plus 55-S Suction Blast Cabinets with 300 cfm power module.

1.1.2 The instructions contain important information required for safe operation of this cabinet. Before using the cabinet, all personnel associated with the cabinet's operation must read this entire manual and all accessory manuals to become familiar with the cabinets' operation, parts, and terminology.

1.2 Safety Alerts

1.2.1 Clemco uses safety alert signal words, based on ANSI Z535.4-2011, to alert the user of a potentially hazardous situation that may be encountered while operating this equipment. ANSI's definitions of the signal words are as follows:

This is the safety alert symbol. It is used to alert you to potential physical injury hazards. Obey all safety messages that follow this symbol to avoid possible injury or death.

NOTIXE

Notice indicates information that is considered important, but not hazard-related, if not avoided, could result in property damage.

⚠ XAYTION

Caution indicates a hazardous situation that, if not avoided, could result in minor or moderate injury.

⚠ ΩΑΡΝΙΝΓ

Warning indicates a hazardous situation that, if not avoided, could result in death or serious injury.

⚠ ΔΑΝΓΕΡ

Danger indicates a hazardous situation that, if not avoided, will result in death or serious injury.

1.3 Table of Contents

SUBJECT	SECTION LOCATION
INTRODUCTION	**1.0**
Scope of Manual	1.1
Safety Alerts	1.2
Table of Contents	1.3
General Description	1.4
Theory of Operation	1.5
Control-Console Functions	1.6
Cabinet and Power-Module Controls and Functions	1.7
Nozzle Options	1.8
HEPA (high-efficiency particulate air) Filter	1.9
Blasting Media	1.10
Compressed-Air Requirements	1.11
Electrical Requirements	1.12
INSTALLATION	**2.0**
General Installation Notes	2.1
Connect Compressed-Air Supply Line	2.2
Ground the Cabinet and Power Module	2.3
Connect Electrical Service	2.4
Set Air-Inlet Damper	2.5
Final Assembly	2.6
FIELD INSTALLED ACCESSORIES	**3.0**
Aluminum Oxide (aggressive media) Kit	3.1
Cabinet Curtains Installation	3.2
Track and Low-Profile Turntable	3.3
U-Tube Manometer	3.4
HEPA Afterfilter	3.5
Quick Change Filter Assy	3.6
OPERATION	**4.0**
Season Filter Cartridge	4.1
Media Loading and Media Capacity	4.2
Media capacity	4.2.1
Media loading	4.2.2
Media Unloading	4.3
Loading and Unloading Parts	4.4
Blasting Operation	4.5
Blasting Technique	4.6
Stop Blasting	4.7
Shutdown	4.8
ADJUSTMENTS	**5.0**
Blasting Pressure (pilot regulator)	5.1
Air Jet	5.2
Media-Air Mixture	5.3
Reclaimer Static Pressure (exhaust damper)	5.4
Cabinet Air-Inlet Damper	5.5
Door Interlocks	5.6
Dustbin Interlock	5.7

Dust–Collector Pulse Pressure 5.8
Digital Pulse-Control Timer 5.9
Operating principles 5.9.1
Setting pulse OFF time (time between pulses) 5.9.2
Reset pulse ON time to factory setting 5.9.3
Reset timer functions to factory "A" setting 5.9.4
Reset timer subranges to factory settings 5.9.5
Using the Manometer to Set Static Pressure.....5.10

PREVENTIVE MAINTENANCE 6.0
Inspection Notes 6.1
Daily Inspection and Maintenance Before Blasting 6.2
Check media level 6.2.1
Inspect reclaimer debris screen and door gasket ...6.2.2
Drain compressed-air filter 6.2.3
Inspect dustbin 6.2.4
Daily Inspection During Blasting 6.3
Inspect cabinet for dust leaks 6.3.1
Check exhaust air for dust 6.3.2
Drain pulse reservoir (at end of day) 6.3.3
Weekly Inspection and Maintenance Before Blasting ...6.4
View-window cover lens 6.4.1
Gloves 6.4.2
BNP® gun assembly 6.4.3
Media hose 6.4.4
Dust-collector's inline filter 6.4.5
Weekly Inspection During Blasting 6.5
Flex hoses 6.5.1
Monthly Inspection and Maintenance 6.6
Reclaimer wear plate 6.6.1
Additional Dust-Collector Cartridge Pulsing 6.7

SERVICE MAINTENANCE 7.0
Gloves Replacement 7.1
Quick-Change Gloves and Glove Mounts 7.2
BNP® Gun Assembly 7.3
View-Window Cover Lens 7.4
View-Window Replacement 7.5
Window-Gasket Replacement 7.6
Window-Frame Removal 7.7
LED Light Assembly 7.8
Tube-Lock Fittings 7.9
Servicing Pneumatic Inlet Assembly 7.10
Replacing Reclaimer Wear Plate 7.11
Replacing Filter Cartridge 7.12
Seasoning Filter Cartridge 7.13
Clean Dust-Collector's Inline Filter 7.14
Clean Dust-Collector's Snubber Fittings 7.15
Diaphragm Pulse Valve 7.16

TROUBLESHOOTING – PNEU. and MECHANICAL 8.0
Poor visibility/dusty media 8.1
Abnormally high media consumption 8.2
Reduction in blast cleaning rate 8.3
Plugged nozzle 8.4
Media bridging 8.5
Media surge 8.6
Blockage in media hose 8.7
Poor suction in media hose 8.8
Air only (no media) from nozzle 8.9
Blowback through media hose 8.10
Blasting does not begin when foot pedal is pressed 8.11
Blasting continues after releasing foot pedal 8.12
Media buildup in cabinet hopper 8.13
Static shocks 8.14
Dust or media leaking from cabinet 8.15
Dust leaking from dust collector 8.16
Dust collector does not pulse 8.17
Dust-collector pulse is steady stream of air
instead of quick pulse 8.18
Duct collector differential gauge is consistently high 8.19

TROUBLESHOOTING - ELECTRICAL 9.0
Green pushbutton does not illuminate..... 9.1
Dust-collector exhauster motor does not start 9.2
Blasting does not begin when foot pedal is pressed 9.3
Foot pedal not working 9.4
Blast solenoid valve not working 9.5
Poor visibility/dusty media 9.6
Cabinet LED light does not turn ON 9.7

ACCESSORIES and REPLACEMENT PARTS 10.0
Optional Accessories 10.1
Pulsar Plus 55-S Cabinet Assembly 10.2
Cabinet Control Console 10.3
View Window Assembly 10.4
Metering Valve 10.5
Gloves and Glove Mounts 10.6
LED Light Assembly 10.7
BNP® Gun and Feed Assembly 10.8
Pneumatic Controls and Parts 10.9
Reclaimer, 300 CFM 10.10
Dust Collector Assembly, 300 cfm 10.11

1.4 General Description

1.4.1 The Pulsar Plus cabinets encloses the blasting environment to provide efficient blasting while maintaining a clean surrounding work area. Production rates are influenced by size of air jet and nozzle, compressor output, working pressure, type and size of media, and angle and distance of the nozzle from the blast surface. Pulsar Plus 55-S Suction Cabinets consist of two major components.

1. Cabinet Enclosure
2. 300 cfm Power Module

The cabinet and power module are fully assembled, refer to Figure 1 for arrangement and primary components of the cabinet and power module. Figure 2 shows additional parts and functions on the cabinet and Figure 3 shows additional parts on the power module.

1.4.2 Pulsar Plus 55 Cabinet Enclosure:

Approximate work chamber dimensions:
42" wide x 23" deep x 30" high.

1.4.3 Pulsar Plus III-S Power Module:

The Power Module is attached to the back of the cabinet enclosure and includes:

- 300 cfm reclaimer

- 300 cfm reverse-pulse cartridge dust collector

Dust-collector filter is a cartridge-type pleated filter with a MERV 12 rating.

1.5 Theory of Operation

1.5.1 Blasting: Once the cabinet is correctly set up and turned on, the cabinet is then ready for operation by actuation of the foot pedal. Pressing down on the foot pedal causes air to flow through the blast gun. The partial vacuum created by air moving through the gun draws media into the blast-gun mixing chamber. The media mixes with the air stream and is propelled out the nozzle. After striking the object being blasted, blast media, fines, dust, and byproducts generated by blasting fall through the grate into the cabinet hopper. These particles are then drawn into the power-module reclaimer for separation. When the foot pedal is released, blasting stops.

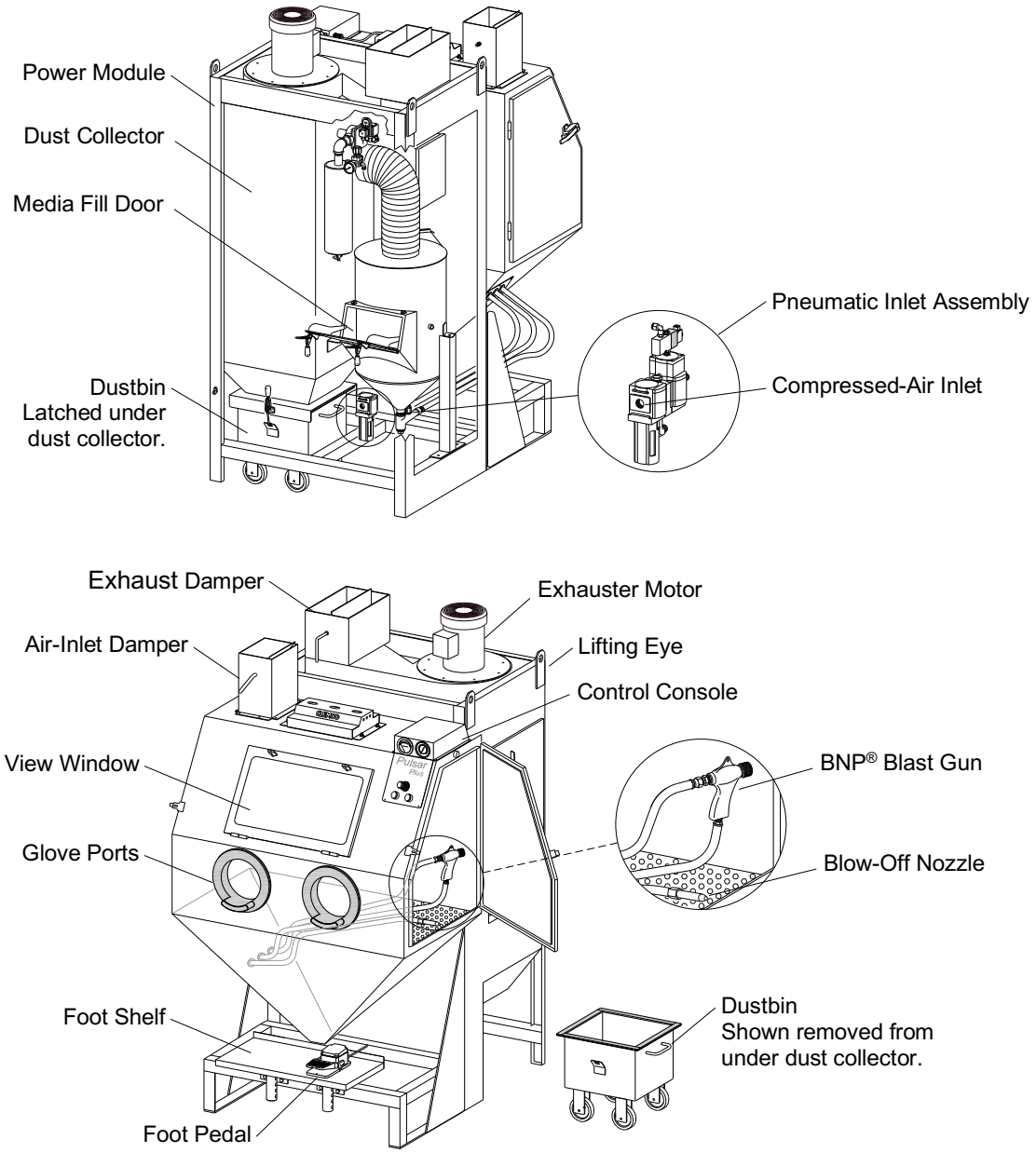

- Refer to Section 2.0 for setup instructions and additional components.
  - Refer to Figure 2 of additional cabinet components.
  - Refer to Figure 3 for additional power module components.

Figure 1

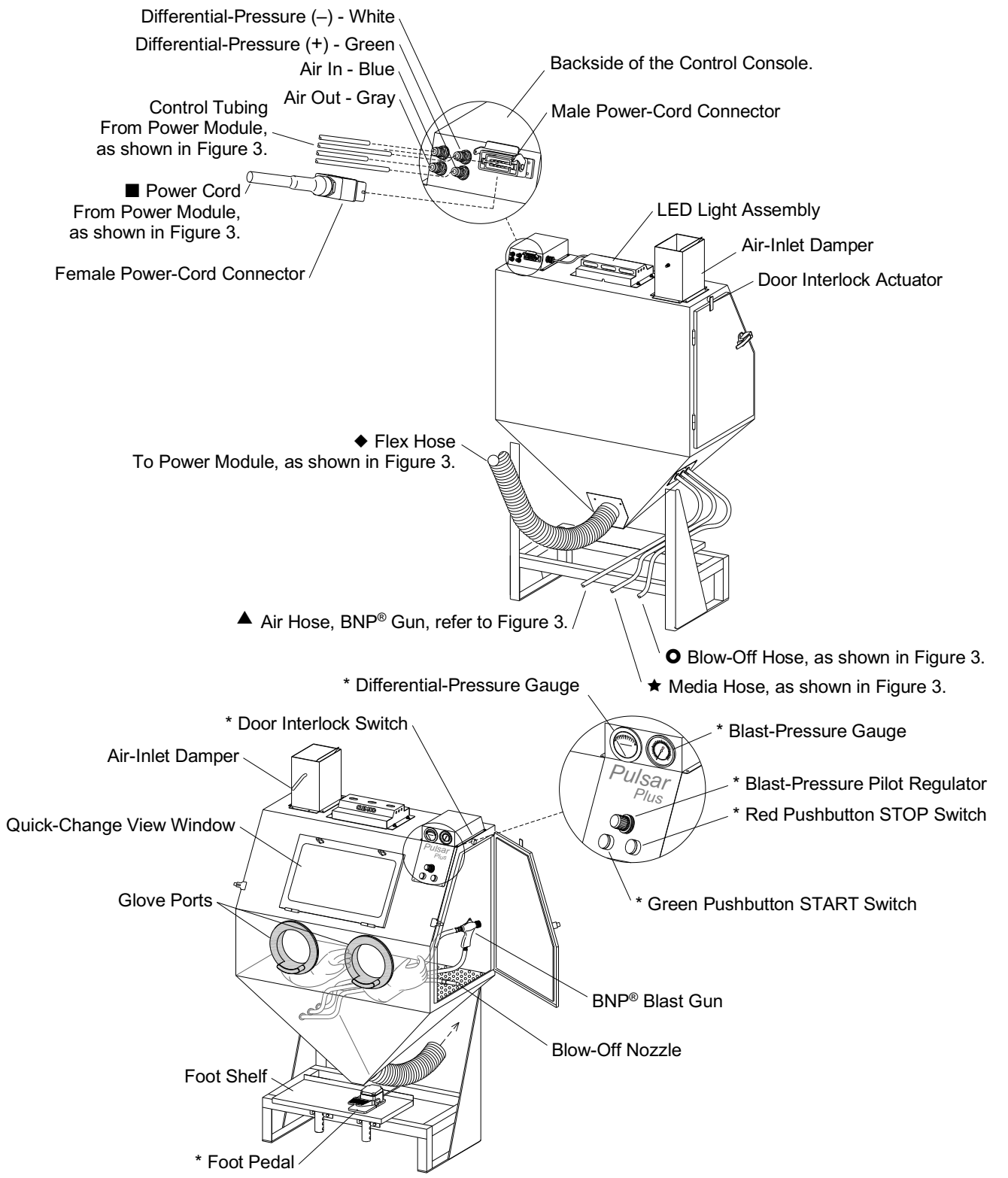

* Refer to Sections 1.6 and 1.7 for explanation of control functions.

PULSAR PLUS 55-S CABINET ENCLOSURE

Figure 2

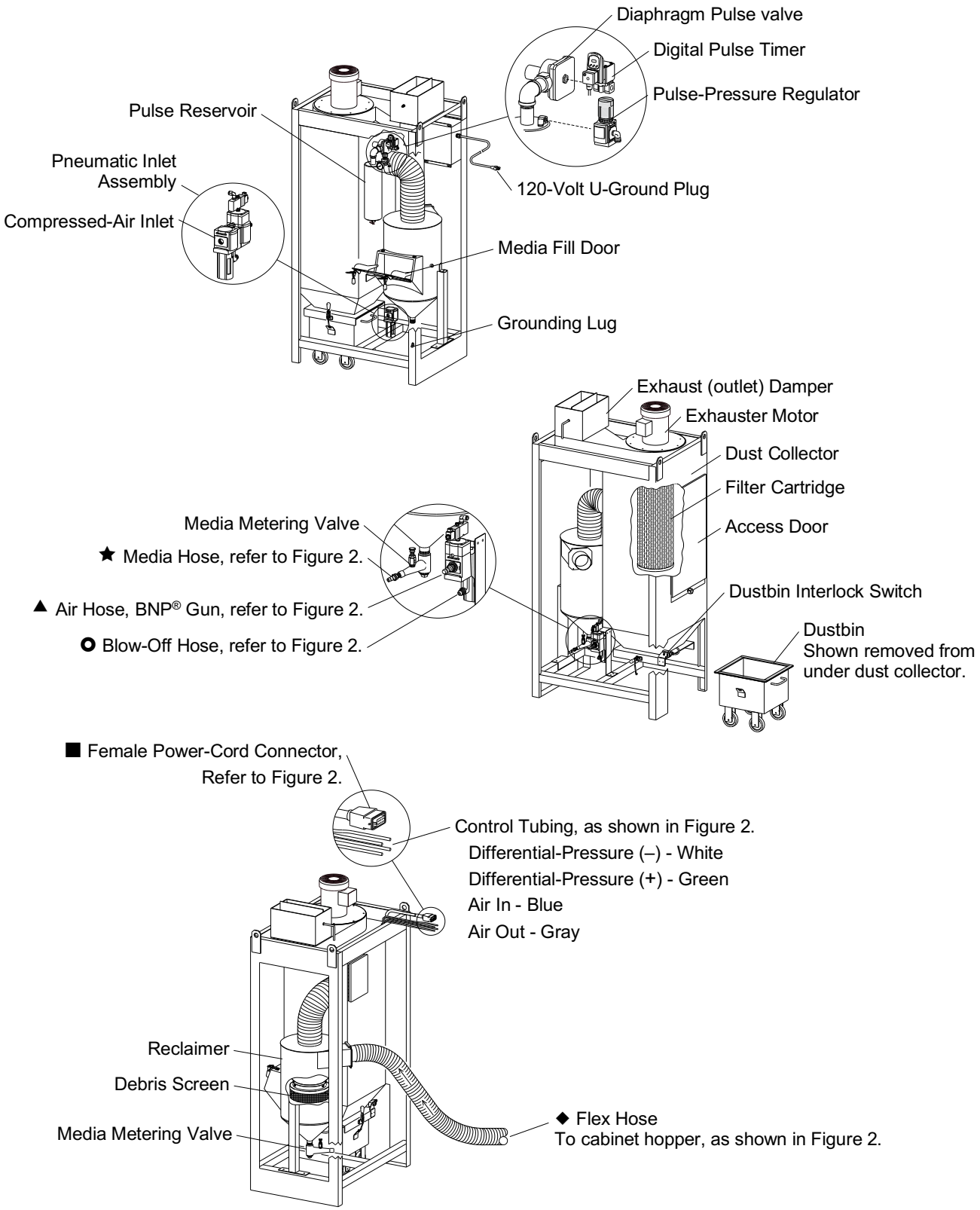

PULSAR PLUS 55-S 300 CFM POWER MODULE

Figure 3

1.5.2 Media recovery and separation: When entering the reclaimer, dust and fines are first separated from reusable blast media and drawn into the dust collector. Next, the media is screened of oversize particles and returned to the reclaimer hopper for reuse. Dust and fines drawn through the reclaimer are trapped on the outer surface of the dust-collector filter cartridge, resulting in the exhauster discharging clean air.

1.5.3 Dust collector: The dust-collector filter cartridge is cleaned at regular timed intervals by a pulse of high-velocity compressed air expanding against the inner surface of the cartridge. The expanding air momentarily reverses air flow through the cartridge, releasing dust accumulated on the outer surface. The dust particles fall away from the cartridge and into the dustbin for removal.

Pulse timing is controlled with the digital pulse timer and air pressure. The pulse sequence automatically begins when the exhauster is turned ON. There are times, such as when seasoning the filter cartridge, that pulsing should be OFF. To prevent automatic pulsing, turn the pulse-pressure regulator located on the pulse reservoir to 0 psi. Refer to Section 5.8 to set pulse pressure. If pulse pressure is set to 0 psi, the timer is still functioning but there is no pulse because pressure is turned off. Pulse pressure should be left OFF (0 psi) until the cartridge is seasoned, per Section 7.13.

NOTIXE

Do not pulse a new dust collector or replacement cartridge until the cartridge is properly seasoned, per Section 7.13. Pulsing an unseasoned cartridge can decrease the efficiency of the dust collector and cause premature cartridge failure.

1.6 Control-Console Functions – Figure 4

1. Blast-Pressure Adjustment: The pilot pressure-regulator adjust blast pressure to suit the application. Refer to Section 5.1 to adjust blast pressure.

2. Green Start Pushbutton Switch: The button lights up when power is applied to the cabinet. The pushbutton does not light if the dustbin interlock is not engaged.

Pushing in the button turns on the cabinet light and starts the exhauster. Other controls will not operate unless the exhauster is running.

3. Red Stop Pushbutton Switch: Pushing in the button stops the exhauster and all other controls.

4. Blast-Pressure Gauge: Displays blast pressure, which is adjusted by the blast-pressure regulator, as noted above.

5. Filter Differential-Pressure Gauge: The differential-pressure gauge measures pressure drop (pressure difference between the clean and dirty side of the filter cartridge) across the filter cartridge. The gauge is the best way to monitor cleaning efficiency and dust buildup on the cartridge. Refer to Section 7.12 to replace the filter cartridge.

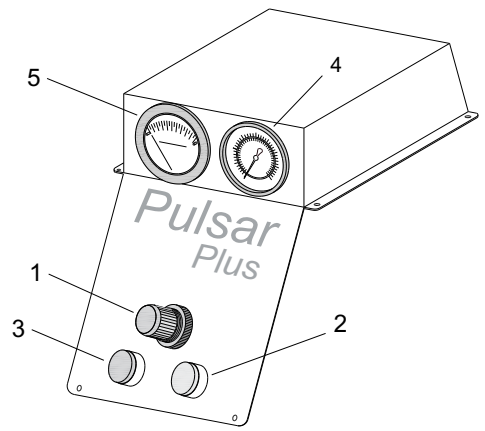

Figure 4

1.7 Cabinet and Power-Module Controls and Functions.

Foot Pedal: When the cabinet is set up and operational, blasting begins when the foot pedal is pressed and blasting stops when the pedal is released.

Door Interlocks: The door interlocks disable blasting when either cabinet door is open. To enable blasting, the doors must be closed and the door interlock switches engaged. Refer to Section 5.6 to adjust door interlocks.

Dustbin Interlock: The dustbin interlock disables blasting when the dustbin is removed or not fully clamped in place. To enable blasting, the bin must be correctly positioned and securely clamped. Refer to Section 5.7 to adjust the dustbin interlock switch

Dust-Collector Pulse Pressure: The pulse-pressure regulator controls filter cartridge cleaning-pressure. Lower pressure is needed when the filter cartridge is newer and has only a light dust cake. Higher pressure is needed to push the dust away from the cartridge when it is heavily loaded with dust. Refer to Section 5.8 for adjustment procedure. **NOTE: Pressure should be set to zero (0 psi) until the filter cartridge is seasoned.**

Dust-Collector Pulse Timing: Pulse timing is controlled with the digital pulse timer. The pulse sequence automatically begins when the exhauster is turned ON. Refer to Section 5.9 to adjust the pulse timer.

1.8 Nozzle Options

1.8.1 Unless otherwise specified at the time of purchase, the cabinet is provided with a No. 5 (5/16" orifice) ceramic nozzle and No. 5 (5/32" orifice) air jet. Optional, more durable tungsten carbide and boron carbide nozzles are available and are shown in *Section 10.1: Optional Accessories and in Section 10.8 BNP Gun and Feed Assembly.* Use boron carbide nozzles when blasting with aggressive media, as noted in Section 1.10.4.

1.9 HEPA (high-efficiency particulate air) Filter

1.9.1 An optional HEPA afterfilter provides additional filtration, trapping 99.97% of dust down to 0.3 micron particles. A HEPA filter must be used when removing toxic coatings, heavy metals, or any other toxic materials. HEPA filter is listed in *Section 10.1: Optional Accessories*.

⚠ ΩΑΡΝΙΝΓ

All dust is hazardous to breath. Emissions can occur from the dust collection system. Identify all materials that are to be removed by blasting. If any toxic materials such as lead dust or dust from other heavy metals and corrosives, or any other toxic materials are being removed, use a HEPA afterfilter to assist in maintaining inhalation hazards below the permissible exposure limits (PELs). Prolonged exposure to any dust can result in serious lung disease and death. Short-term ingestion of toxic materials can cause serious respiratory injury or death. Filtration may not be adequate in reducing all inhalation hazards. It remains the employer's or user's responsibility to ensure all emissions are safe to breath.

1.10 Blasting Media

1.10.1 Always use media specifically manufactured for blasting and those that are compatible with the surface being blasted. Media produced for other applications may be inconsistent in size and shape, contain particles that could plug the nozzle or media metering valve, or cause irregular wear. Always obtain the safety data sheet (SDS) for the blasting media prior to blasting and identify material being removed by blasting, paying attention to worker health risks and the presence of any hazardous/toxic substances.

Most common reusable media specifically manufactured for blasting can be used in Pulsar® Plus Cabinets. The media sizes shown in this section are provided as a guideline only. The guideline is based on standard 5/32" orifice air jet with 5/16" nozzle and average conditions with variables such as blast pressure, media-air mixture, visibility inside the cabinet, humidity, and reclaimer cleaning rate.

Several variables affecting the reclaimer cleaning rate include reclaimer size (cfm), contamination of parts being blasted, media friability, damper setting (static pressure), and dust-collector filter loading (differential pressure across the dust filters).

As a rule, larger orifice air jets and nozzles deliver more media, requiring higher performance from the reclaimer. When using larger nozzles, the maximum mesh size of media will be smaller than normally recommended. Using media finer than those recommended may decrease visibility and, at some point, carryover to the dust collector. Media coarser than those recommended may be too dense for the reclaimer to recover from the cabinet hopper.

1.10.2 Steel shot and steel grit: Steel grit or steel shot cannot be used with a Pulsar Plus 55-S cabinet. Steel media is too heavy to use with cabinets equipped with a 300 cfm reclaimer.

1.10.3 Sand and slag: Sand and slag media are not suitable for cabinet use. Sand should NEVER be used for abrasive blasting because of the respiratory hazards associated with media containing free silica. Slags are not recommended for cabinet use because they rapidly break down and are not recyclable.

1.10.4 Silicon carbide, aluminum oxide, and garnet: These are the most aggressive of the commonly used media. Aggressive media between 54 to 180-Mesh may be used, but the service life of any components exposed to the media will be reduced. To avoid unscheduled downtime and maximize cabinet life, periodically inspect the reclaimer wear plate, blast hose, and nozzle for wear and replace parts as needed.

When using aggressive media, install an optional aluminum oxide kit, which includes rubber curtains for the cabinet interior and a boron carbide-lined nozzle. Nozzles lined with boron carbide extend nozzle wear life. Refer to Section 10.8 *BNP Gun and Feed Assembly.*

1.10.5 Glass bead: No. 6 to No. 12 glass beads is recommended for the Pulsar® Plus 55. Most beads are treated to ensure free-flow operation, even in environments of moderately high humidity. Glass beads subjected to excessive moisture may be reused only after thoroughly drying and breaking up any clumps.

1.10.6 Plastic media: Plastic and similar lightweight and/or nonaggressive media are generally not recommended for suction-style cabinets because the lower blast velocity of suction blasting combined with the softer and lighter-weight media do not provide the media impact for productive blasting. Best performance from plastic media is achieved with pressure blasting, requiring a pressure vessel with a 60-degree conical bottom. Refer to Clemco's Aerolyte Cabinet line.

1.10.7 Bicarbonate of soda: Bicarbonate of soda is not recommended for use in standard cabinets. Bicarb is a one-use media, which quickly saturates the filter cartridge(s). Best performance from bicarb media is achieved with pressure blasting, requiring a pressure vessel. Refer to Clemco's Aerolyte cabinet line for cabinets that are specifically designed for use with bicarbonate of soda.

1.11 Compressed-Air Requirements

1.11.1 The size of the compressor required to operate the cabinet depends on the size of the air jet and blasting pressure. Unless otherwise specified, cabinets are supplied with a No. 5 (5/32" orifice) jet. Refer to the table in Figure 5 to determine air consumption. Consult with a compressor supplier for a suggested compressor size based on the air consumption.

COMPRESSED-AIR CONSUMPTION IN CFM

BNP Gun	Jet Orifice	Nozzle Orifice	CFM	PSI
No. 4	1/8"	5/16"	21	80
No. 5	5/32"	5/16"	32	80
No. 6	3/16"	3/8"	47	80

* Using a No. 6 jet and nozzle in applications that produce excessive dust may cause poor visibility. The 300 cfm reclaimer may not recover heavy, coarse abrasive from the cabinet hopper when using a No. 6 jet and nozzle combination.

Figure 5

1.11.2 The compressed-air filter at the power module's air-inlet connection removes condensed water from the compressed air. Its use is especially important in areas of high humidity or when fine-mesh media are used. Moisture causes media to clump and inhibits free flow through the feed assembly. If the filter does not remove enough moisture to keep media dry and flowing, it may be necessary to install an air dryer or aftercooler in the air-supply line.

1.12 Electrical Requirements

1.12.1 Standard cabinets are provided with 1 HP, 120/230V, 1 PH, 60 Hz (wired 120). FLA (full load amps) are as follows: 120/12, 208/6.6, 230/6.2.

1.12.2 If the motor is standard 120-volt, single phase, a power cord is supplied.

2.0 INSTALLATION

2.1 General Installation Notes

- Select a location where compressed air and electrical service are available.
- The cabinet location must comply with OSHA and local safety codes.
- Provide enough clearance at the dust collector for cartridge maintenance and to remove the dustbin.
- Allow for full access to all doors and service areas and for efficient handling of large parts.
- All air fittings and connections must be wrench-tight.

2.2 Connect Compressed-Air Supply Line

⚠ ΩΑΡΝΙΝΓ

Failure to observe the following before connecting the equipment to the compressed-air source can cause serious injury from the sudden release of trapped compressed air:

- **Lockout and tagout the compressed-air supply.**
- **Bleed the compressed-air supply line.**

2.2.1 Install an isolation valve at the air source to enable depressurization for service. Once the valve is installed, turn it off and perform lockout and tagout procedure until all air connections are done.

⚠ ΩΑΡΝΙΝΓ

To avoid the risk of injury from compressed air, install an isolation valve and bleed-off valve where the air supply is tapped into the compressed-air system. This enables a lockout and tagout procedure and depressurization of the compressed-air line before performing maintenance.

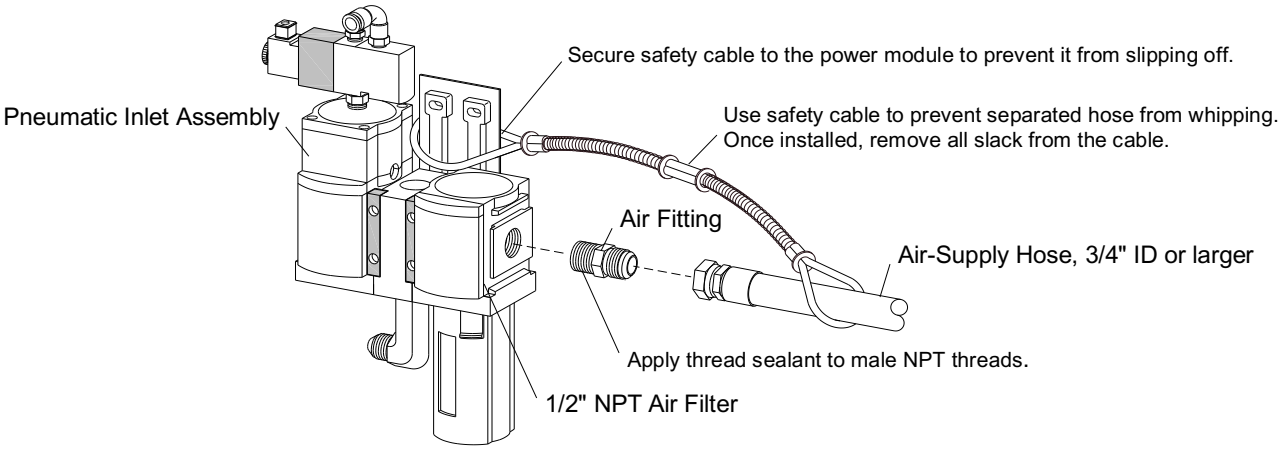

The type of air fitting and hose connections are for reference only.
When using twist-on couplings, install safety lock pins to prevent accidental disconnections.

Figure 6

2.2.2 Use a 3/4" ID or larger air-supply line from the air source to the air filter located on the power module. A smaller diameter hose may reduce blasting efficiency.

2.2.3 Refer to Figure 6 and apply thread sealant to the male threads of an air fitting that is compatible with the air-supply hose fitting, and then install it onto the 1/2" NPT air filter (pneumatic inlet assembly) located on the power module. The style of connection shown in Figure 6 is for reference only.

2.2.4 **Connect the air** supply line to the previously installed air fitting.

⚠ ΩΑΡΝΙΝΓ

Hose disconnection while under pressure can cause serious injury or death. Use safety lock pins or safety wire to lock twist-on couplings together and to prevent accidental separation, and use safety cables to prevent hose from whipping should separation occur. Safety lock pins and safety cables are listed in *Section 10.1: Optional Accessories.*

2.3 Ground the Cabinet and Power Module

2.3.1 To prevent static electricity buildup, attach an external grounded wire from an earth ground to the grounding lug on the power module.

2.4 Connect Electrical Service

⚠ ΩΑΡΝΙΝΓ

Shorting electrical components can result in serious injury or death from electrical shock or equipment damage. Electrical power must be locked out and tagged out before performing any electrical work. All electrical work or any work done inside a control panel or junction box must be performed by a qualified electrician and comply with applicable codes.

2.4.1 Standard single-phase wiring

Standard Pulsar Plus cabinets are 120-volt single phase. Power is supplied by a U-ground plug; plug it into a 120-volt outlet. No additional wiring is needed; a wiring schematic is stowed inside the electrical control panel for reference.

⚠ ΩΑΡΝΙΝΓ

Do not use electrical adaptors that eliminate the ground prong on 120-volt plugs. Doing so can cause electrical shock and equipment damage.

2.5 Set Air-Inlet Damper – Figure 7

Located on the top-rear edge of the cabinet, as shown in Figure 1.

2.5.1 The inlet damper must be set to match the cabinet dimensions and reclaimer size. The label on the damper shows the settings in degrees. For the initial setting, align the handle 30 degrees.

2.5.2 Loosen the lock nuts and position the damper handle as noted. When correctly positioned, tighten the lock nuts to maintain the setting. Refer to Section 5.5 for adjustment procedure.

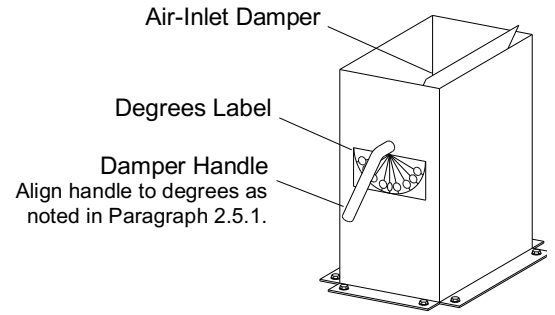

Figure 7

2.6 Final Assembly

2.6.1 Position the foot pedal on the foot shelf or on the floor at the front of the cabinet. The foot shelf is easily removed by removing the two release pins.

2.6.2 A package of five cover lenses is supplied with the cabinet. Install a cover lens to the clean, dry, inner surface of the view window, per Section 7.4.

2.6.3 After all connections are made, slowly open the air-supply valve to pressurize the air-supply line. Listen for leaks. If any are noted, shut off the air supply, bleed the air-supply line, and identify and correct the leak(s).

3.0 FIELD INSTALLED ACCESSORIES

3.1 Aluminum Oxide (aggressive media) Kit

3.1.1 An optional aluminum oxide kit is available factory installed or may be field installed later.

Factory-installed kits consist of black rubber cabinet curtains with grommets, curtain hardware, and a boron carbide nozzle.

Field-installed (or replacement factory installed) kits consist of black rubber cabinet curtains (refer to Section 3.2 for curtain installation), a boron carbide nozzle, and light-lined flex hose. If the existing flex hose is in good condition, reserve the new hose for future replacement.

3.2 Cabinet Curtains Installation

3.2.1 Match curtains to corresponding wall and doors.

3.2.2 Front and rear walls: Position the curtain on the wall to be protected. Using the curtains as templates, mark each mounting point through the grommet holes along the upper edge of the curtain. NOTE: When laying out the attachment points, the upper edge of the rear curtain should be below the bottom edge of the air-duct partition. Remove the curtains and drill a .187" (3/16") diameter hole at each point marked. Install the curtains using the fasteners provided (machine screw, 11/16″ OD flat washer, lock washer and nut) at each grommet. The flat washer is used between the screw head and the rubber curtain grommet on all curtains.

3.2.3 Doors: Using protectors against the curtains and outer doors, clamp the door curtains in place. NOTE: When laying out the attachment points, the upper edges of the door curtains should be even with the outer edges of the door's soundproofing panel. Insert a #10 self-drilling screw with an 11/16″ OD flat washer through the grommet holes. Use a screw gun with a 5/16" socket to drill and thread the screws through the door's inner wall at each grommet.

3.3 Track and Low-Profile Table, Maximum Weight Capacity 500 Lbs

3.3.1 Components of track and table assembly are shown in Figure 8. The assembly consists of:

1. Track assembly: mounts inside the cabinet.
2. Table assembly: rollers on sliding table fit inside the track rails.
3. All necessary mounting fasteners.

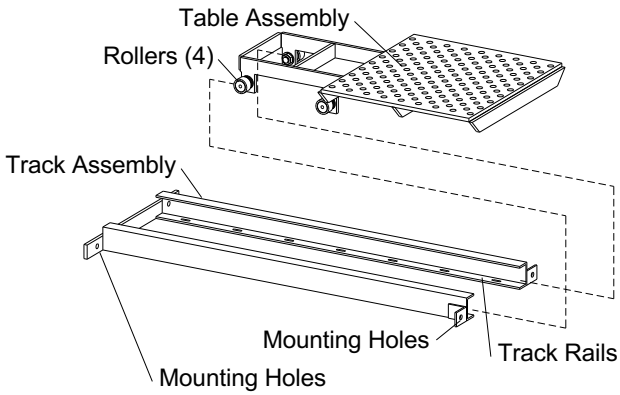

Figure 8

NOTE: The track may be installed on either side of the cabinet, so the table can slide out through either the right side or left side door. The right side is shown in the illustrations.

3.3.2 Combine the table assembly and track by sliding the table assembly rollers into the track channels, as shown in Figure 8.

NOTE: If the weight of the table and track make it too heavy to install as an assembly, the track may be placed in the cabinet to predrill mounting holes, but the table must also be in place within the rails before fasteners are installed.

3.3.3 Refer to Figure 9 and center the track and table assembly inside the cabinet on top of the grate. Make sure the two angled mounting brackets are facing toward the door from which the table will slide.

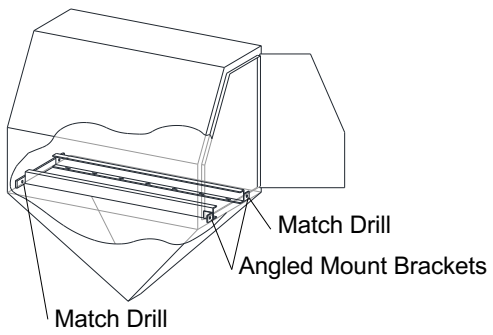

Figure 9

3.3.4 Match drill two 1/2" diameter holes on each side of the cabinet, using the holes in the mounting brackets as a template. NOTE: To prevent the track from shifting, temporarily place a 3/8-NC x 1-1/2" bolt through each hole after it is drilled.

3.3.5 After the holes are drilled and the table assembly is placed in the track rails, secure all fasteners.

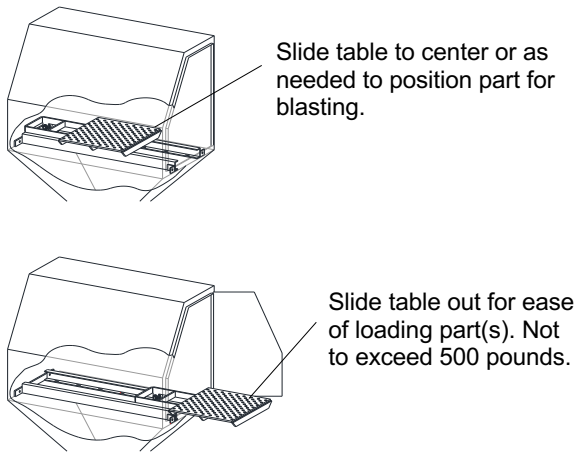

Figure 10

3.4 U-Tube Manometer

The manometer is used to measures reclaimer static pressure and optional HEPA-Filter differential pressure.

The optional manometer is listed in Section 10.1

3.4.1 Consistent reclaimer static-pressure is necessary for precise media separation, as the reclaimer's efficiency is achieved by a centrifugal balance of air flow, particle weight, and size. Reclaimer static pressure is set by adjusting the dust-collector exhaust damper; refer to Section 5.4 to adjust static pressure. Refer to Section 5.10 for using the manometer to set reclaimer static pressure.

3.5 HEPA Afterfilter

3.5.1 Installation and operating instructions are provided with the HEPA Filter.

3.5 Quick Change Filter Assembly

3.5.1 Removal of filter and 3 Lug Design: Figure 70

- Removal of dust collector access door.
  - Remove the retaining knob at the bottom of the door.
  - Swing the bottom of the door away from the dust collector access opening.
  - Lift the door off the top support angle.
- The filter cartridge is secured with a twist -to-release 3-lug top cap. Loosen the tensioning knob, located in the FRONT, enough to rotate the filter cartridge to the right to release it from the two rear shoulder screws, but do not release the cartridge from the mounts at this time.
- From the bottom of the filter cartridge, slide a suitable plastic trash bag over the cartridge to contain dust.
- Rotate the cartridge to the right to remove the lug slots from the rear shoulder screws and tensioning knob and then remove the cartridge from the dust collector access door.
- Retain the filter for reinstallation or discard if installing a new filter.
- Remove the mounting shoulder screws from the top mounting plate.
- Remove remaining dust from the top mounting plate and clean surface.
- Check/clean the threads to make installation easier. Use a 3/8-16 tap if needed.

Figure 70

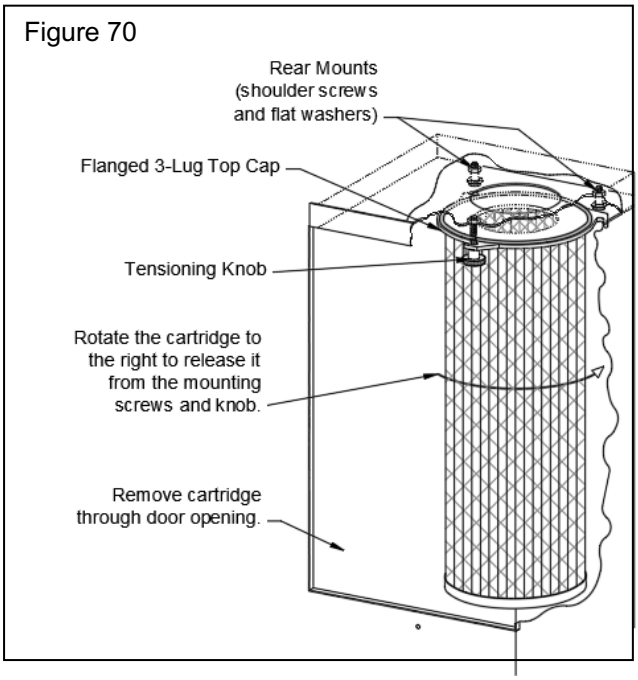

3.5.2 Preparing the Quick Change Filter Assembly: Figure 71

- Attach item #1, Gasket to the top of the assembly as shown in the diagram. Ensure that it is centered on the hole.
- Partially Thread, Qty. 2, Item #2, 3/8 x 1.00 Bolts into the top of the Power Module ceiling. Thread the back two bolts in far enough to hold the filter adaptor.
- Pick up the Filter support assembly, Item #3 with the lever arm towards your body. Slide the Top Adaptor plate into the back two bolts that were just installed. Raise the front of the Filter support in place and install the front bolt, Item #2. Now tighten all three bolts.
- Install the Filter Cartridge.

Figure 71

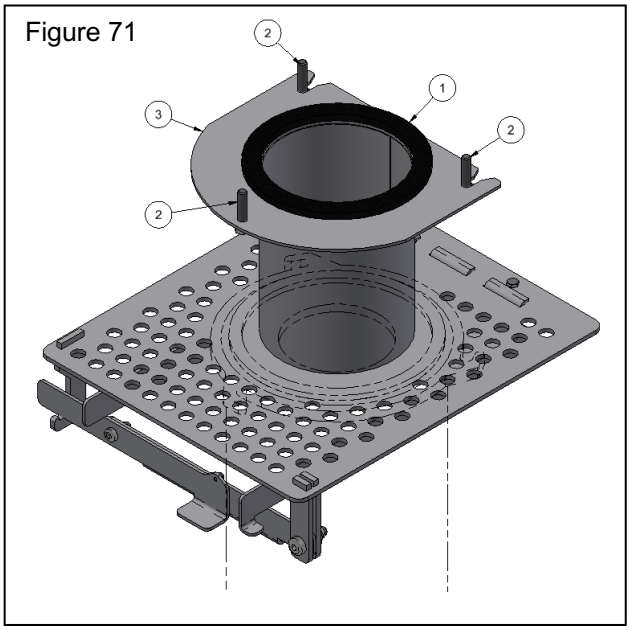

Verify the tightness of all hardware after the first 40 hours of use

4.0 OPERATION

4.1 Season Filter Cartridge

NOTIXE

Do not pulse a new dust collector or replacement filter cartridge until the cartridge is properly seasoned, per Section 7.13. Pulsing unseasoned cartridges can decrease the efficiency of the dust collector and cause premature cartridge failure.

4.2 Media Loading and Media Capacity – Figure 11

4.2.1 Media capacity: The approximate capacity and minimum media amount is shown in the table below.

Reclaimer Size	Minimum Wt.	Capacity
300 cfm	10 lbs	50 lbs (0.5 cuft)

4.2.2 Media loading: Refill only after all media has been recovered from the cabinet. **Do not pour media directly into the cabinet hopper, as overfilling may occur.** Overfilling results in media carryover to the dust collector and possible blockage in the conveying hose.

1. Turn OFF the exhauster.
2. Unhook the two door latches and open the reclaimer fill door.
3. Add clean, dry media by pouring it through the door opening. Do not fill above the reclaimer cone, as shown if Figure 11.

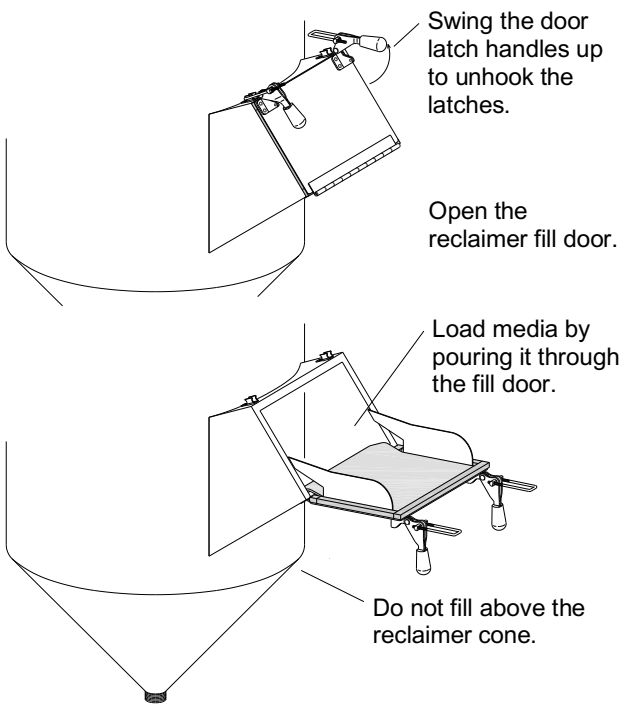

Figure 11

4.3 Media Unloading – Figure 12

4.3.1 To empty the cabinet and reclaimer of media:

1. Use the blow-off nozzle to blow off the cabinet interior and run the exhauster until all media is recovered from the cabinet.
2. Turn OFF the exhauster and place an empty bucket or other suitable container under the metering valve.
3. Unscrew the plastic drain plug from the metering valve, permitting media to flow into the bucket. If media does not flow, it has caked; open the fill door and stir media until it starts to flow.
4. Before the container becomes too heavy to easily manage, replace the plug and empty the container.
5. Replace the plug when the reclaimer is empty, or, if changing media type, purge the media hose, as noted below.

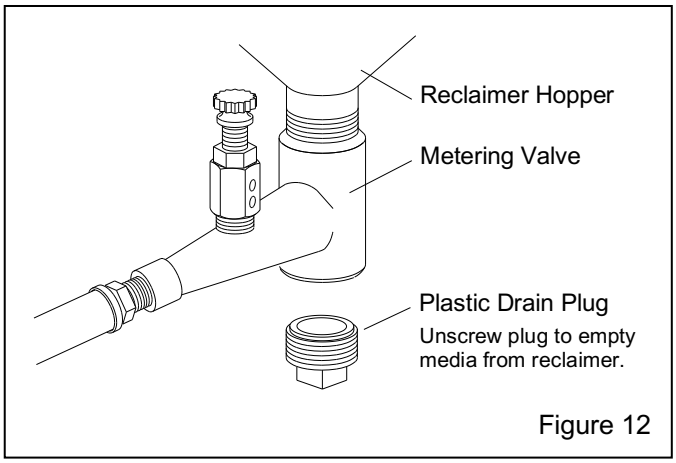

Figure 12

4.3.2 To purge the media hose, before replacing the plug turn ON the exhauster, grasp the gun, and press the foot pedal using the gun to blow off the cabinet interior until the air from the gun and the cabinet are clear. Turn OFF the exhauster and replace the plug.

4.4 Loading and Unloading Parts

⚠ ΩΑΡΝΙΝΓ

Use solid fixturing to hold heavy parts in place. Do not remove lift equipment until the part is adequately supported to prevent movement. Moving heavy, unsupported parts may cause them to shift or topple, and cause severe injury. This is especially important with the use of turntables.

NOTE: Parts must be free of oil, water, grease, or other contaminants that will clump media or clog the filter cartridge. If parts are oily or greasy, degrease and dry them prior to blasting.

4.4.1 Load and unload parts through either door.

4.4.2 When blasting small parts or objects having small pieces that could become dislodged and fall off, place an appropriately sized screen over the grate (or under the grate when frequently blasting small parts) to prevent parts from falling into the hopper. If an object should fall through the grate, stop blasting immediately and retrieve it.

4.4.3 Close door; the door interlock system prevents blasting if either door is open.

4.5 Blasting Operation

⚠ ΩΑΡΝΙΝΓ

To avoid the inhalation of dust, which can cause respiratory illness from short-term ingestion or death from long-term ingestion:

- **Use the blow-off nozzle to blow media off parts before opening doors.**
- **After blasting, keep doors closed and the exhauster running until the cabinet is clear of all airborne dust.**
- **Always close cabinet, reclaimer, and dust-collector doors before blasting. Keep all doors closed during blasting.**
- **Always wear blast gloves.**
- **Stop blasting immediately if dust leaks are detected. Refer to troubleshooting Sections 8.15 and 8.16 and identify source of leak.**

4.5.1 Slowly open the air-supply valve to pressurize the air-supply line. Listen for leaks. If any are noted, shut off the air supply and identify and correct the leak(s). Check for air leaks on the initial startup and periodically thereafter.

4.5.2 After the filter cartridge is seasoned, per Section 7.13, refer to Section 5.8 and adjust the pulse-pressure regulator to 60 psi.

4.5.3 Turn ON lights and exhauster. The green pushbutton START switch performs both functions.

4.5.4 Load parts. If parts are oily or greasy, degrease and dry them prior to blasting.

4.5.5 Close door; the door interlock system prevents blasting if either door is open.

4.5.6 Adjust the pilot pressure regulator to the required blast pressure, per Section 5.1. The blast-pressure regulator knob is located on the upper right side of the cabinet's control console, as shown in Figure 13.

4.5.7 Insert hands into rubber gloves.

4.5.8 To blast, hold the gun firmly, point the gun toward the object to be blasted, and apply pressure to the top of the foot pedal; blasting begins immediately.

⚠ ΩΑΡΝΙΝΓ

Shut down the cabinet immediately if dust discharges from the dust collector or cabinet. Check to make sure the dust-collector filter cartridge is correctly seated and that it is not worn or otherwise damaged. Prolonged breathing of any dust can result in serious lung disease. Short-term ingestion of toxic dust, such as lead or heavy metals, poses an immediate danger to health. Toxicity and health risk vary with type of media and dust generated by blasting. Identify all material being removed by blasting and obtain a safety data sheet (SDS) for the blast media.

4.5.9 When blasting small parts, place an appropriately sized screen over the grate to prevent parts from falling into the hopper. If an object should fall through the grate, stop blasting immediately and retrieve it.

NOTIXE

To prevent rapid frosting of the view window, install a view-window cover lens, per Section 7.4, and avoid pointing the blast nozzle toward the view window

4.5.10 When blasting parts off the grate, use a solid conductive back rest to support the part. Without this assist, especially with longer blasting operations, the operator will tire easily from resisting blast pressure, and static electricity could build up in the ungrounded part and cause static shocks. Whenever possible, avoid holding small parts that require blasting into the glove.

4.6 Blasting Technique

4.6.1 Blasting technique is similar to spray painting technique. Smooth, continuous strokes are usually most effective. The distance from the part affects size of blast pattern. Under normal conditions, hold the gun approximately 3" to 6" from the surface of the part.

4.7 Stop Blasting

4.7.1 To stop blasting, remove foot pressure from the top of the foot pedal.

4.7.2 Use the blow-off nozzle to blow media off cleaned parts. To operate the blow-off nozzle, hold the nozzle securely, point the nozzle toward the blow-off item, and bend the end the nozzle to activate the blow-off. Release the nozzle to shut off the blow-off.

4.7.3 Keep doors closed and exhauster running until the cabinet is clear of all airborne dust.

4.7.4 Unload parts.

4.8 Shutdown

4.8.1 Shut off the air-supply valve, bleed the air-supply line, and drain the compressed-air filter and dust-collector pulse reservoir.

4.8.2 Switch OFF the lights and exhauster by pressing the red pushbutton STOP switch.

5.0 ADJUSTMENTS

5.1 Blasting Pressure (pilot regulator) – Figure 13

5.1.1 The pilot regulator, located on the upper-right side of the cabinet's control console, enables the user to adjust blasting pressure to suit the application while blasting. The suitable pressure for most purposes is about 80 psi. Lower pressure may be required on delicate substrates and will reduce media breakdown. Higher pressure may be required for difficult blasting jobs on durable substrates, but will increase media break down. If pressure is too high, suction in the media hose will decrease and if high enough cause blowback in the hose. Optimal production can only be achieved when pressure is carefully monitored.

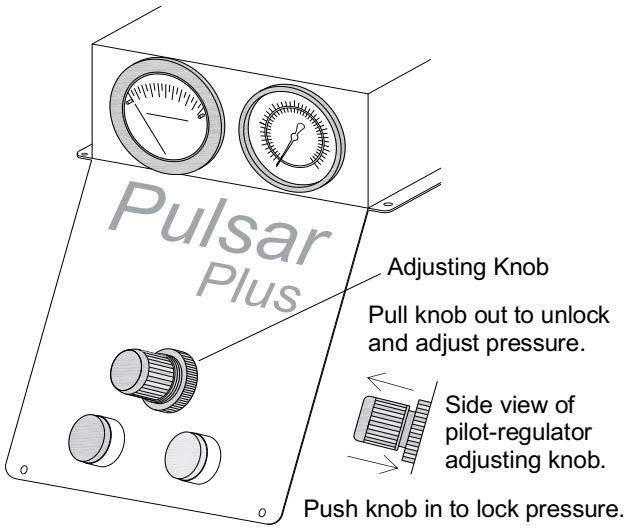

When viewed from the knob end, turn knob clockwise to increase pressure; turn counterclockwise to decrease pressure.

Figure 13

5.1.2 To adjust pressure, unlock the regulator knob by pulling it out, as shown in Figure 13, and turn it clockwise to increase pressure or counterclockwise to decrease pressure. Pressure may drop slightly from closed-line pressure when blasting starts. Once operating pressure is set, push the knob to lock it and maintain the setting.

5.2 Air Jet – Figure 14

5.2.1 Thread the air jet 4-1/2 to 5 full turns into the gun body. Doing so leaves 3-1/2 to 4 threads exposed past the lock nut. Tighten the lock nut to maintain the setting. Refer to Section 10.8 for the optional adjusting tool, which correctly positions the jet. Instructions are provided with the tool.

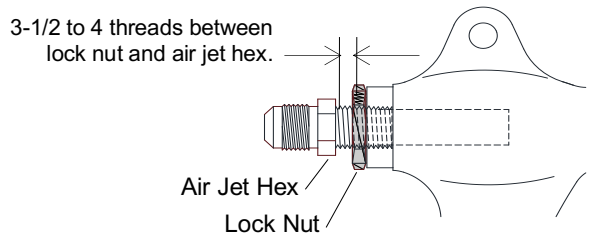

Figure 14

5.3 Media-Air Mixture – Figure 15

5.3.1 Check the media stream for correct media-air mixture; media flow should be smooth and appear as a light mist coming from the nozzle.

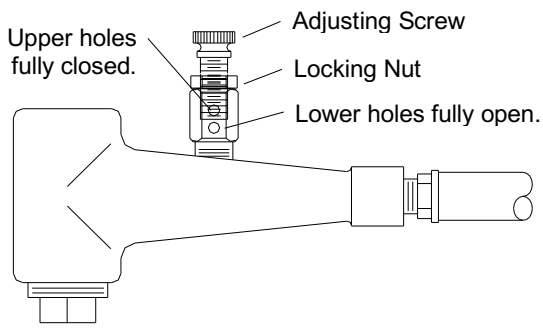

Figure 15

5.3.2 If media does not flow smoothly, loosen the locking nut, and adjust the metering screw until the upper holes in the metering stem are closed off and the lower holes are fully open, as shown in Figure 15. This adjustment is a starting point.

5.3.3 If pulsation occurs in the media hose, either media is damp and caked, or not enough air is entering the media stream. While blasting, loosen the lock nut and slowly turn the adjusting screw out (counterclockwise when viewed from the top) until the media flows smoothly. Tighten the lock nut finger-tight to maintain the setting.

5.3.4 If media flow is too light, decrease air in the mixture by turning the metering screw in (clockwise when viewed from the top) covering more of the holes so less air enters the media hose. Tighten the lock nut finger-tight to maintain the setting.

5.4 Reclaimer Static Pressure (exhaust damper) Figure 16

5.4.1 Static-pressure settings vary with size of the reclaimer, and the size, weight, and type of media.

5.4.2 Adjust static pressure by opening or closing the exhaust damper located on the top of the power module, as shown in Figure 16. The damper plate lines up with the handle. When the handle is vertical, the damper is fully open; when the handle is horizontal, the damper is fully closed.

- If the damper is not opened far enough, the reclaimer will not remove fines, resulting in dusty media and poor visibility; or it will not convey media, causing media buildup in the hose between the cabinet hopper and power module.
- If the damper is opened too far, it may cause carryover (usable media carried into the dust collector) and result in excessive media consumption.
- Open only as far as necessary to obtain a balance of maximum dust removal without media carryover.

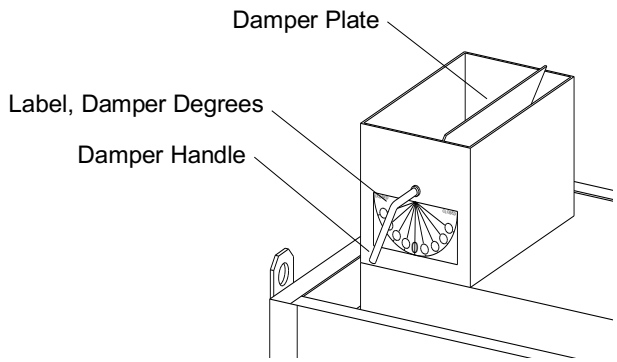

If a manometer is not available, begin with the handle pointing toward 45 degrees, then adjust as instructed paragraphs 5.4.2 and 5.4.4.

Figure 16

5.4.3 A manometer (flexible U-tube) or differential-pressure gauge is useful for adjusting and monitoring static pressure. The manometer kit and differential-pressure gauge are listed in *Section 10.1: Optional Accessories*. Refer to Section 5.10 for using the manometer to set reclaimer static pressure. The following are static-pressure starting points for given media. Static pressure may need to be lower with finer media, higher with coarser media. **If a manometer is not available, begin with the damper about half open (handle pointing toward 45 degrees on the label).**

Glass Bead No. 6 and 7 ..... 3-1/2" – 4"
Glass Bead No. 8 to 12 ..... 3" – 3-1/2"
Aluminum Oxide 60-Mesh to 80-Mesh ..... 4" – 5"
Aluminum Oxide 80-Mesh to 180-Mesh ..... 3" – 4"

5.4.4 To adjust the damper:

1. Loosen the tensioning nut located on the backside of the damper. After completing the adjustment, tighten the nut to maintain setting.
2. Adjust the damper to provide the static pressure noted in Paragraph 5.4.3 or to 45 Degrees.
3. Run the media through several blast cycles, allowing the reclaimer to function with these settings. Inspect media in the reclaimer and fines in the dust collector, as noted in Paragraph 5.4.2. Continue adjusting static pressure until optimum dust and fines removal without carryover is attained.
4. When using a manometer, make a note of the optimum setting so adjustment may be made (as noted in Paragraph 5.4.5) to maintain that setting.

5.4.5 As dust accumulates on the outer surface of the cartridge, static pressure drops, requiring one or more of the following adjustments:

- Increase pulse pressure, per Section 5.8.
- Decrease pulse timing (Off time), per Section 5.9.2.
- Open the damper to bring static pressure to optimum setting.

5.5 Cabinet Air-Inlet Damper

5.5.1 Once the damper is initially set, per Section 2.5, it seldom requires readjustment. The initial setting produces approximately 0.5″ to 0.75″ of static pressure in the cabinet enclosure. **Do not confuse cabinet static pressure with reclaimer static pressure, which is controlled by the exhaust damper, as noted in Section 5.4. Reclaimer pressure must be set before cabinet pressure.**

5.5.2 Using a manometer (as noted in Section 5.10 and listed in Section 10.1) is the most accurate method of monitoring and adjusting cabinet pressure. Following the instructions packed with the manometer, start the exhauster, insert the needle into a glove, and adjust pressure using the inlet damper. Open the damper further to decrease static pressure or close it further to increase pressure.

5.5.3 If a manometer is not available, use the gloves as an indicator. With the exhauster ON, the gloves should be inflated, but not elevated off the grate.

5.6 Door Interlocks – Figure 17

⚠ ΩΑΡΝΙΝΓ

Never bypass the door interlock system. Doing so can result in serious injury from unexpected blasting.

5.6.1 The door interlocks disable blasting when doors are open. To enable blasting, the door-interlock switches must be engaged when the doors are closed. The interlocks are set at the factory and do not normally require field adjustment unless parts are replaced. When adjustment is required, proceed as follows:

5.6.2 Close cabinet doors.

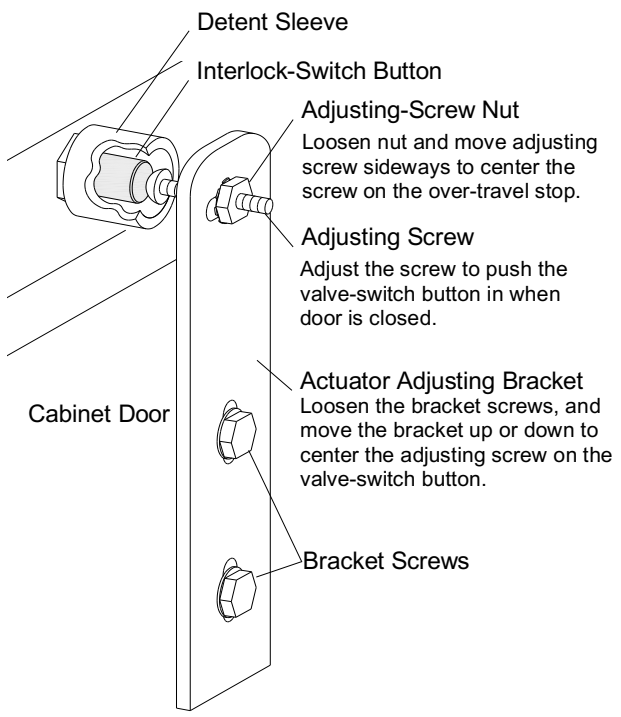

Figure 17

5.6.3 Loosen the actuator-bracket screws and adjusting-screw nut. Move the actuator bracket up or down, and the adjusting screw sideways, as needed to center the adjusting screw on the switch's button (in center of detent sleeve). Tighten the bracket screws.

5.6.4 Turn the adjusting screw out until it no longer contacts the switch's button.

5.6.5 Turn the screw in until it engages the switch without applying excessive pressure. Listen closely and a click can be heard as the screw engages and disengages the switch. Tighten the adjusting screw nuts.

5.6.6 Test the operation with the doors open and then again closed. Negative pressure inside the cabinet may cause the doors to flex inward. Tests should be performed with the exhauster running. Point the nozzle away from the door during the tests and open the door only enough to disengage the interlock switch. The interlocks should stop the blasting when either door is open and permit blasting when the doors are closed.

5.7 Dustbin Interlock – Figure 18

5.7.1 The dustbin interlock switch disables blasting when the dustbin is lowered to remove it from under the dust collector.

5.7.2 To enable blasting, the interlock switch must be engaged when the bin is closed (raised against the dust-collector hopper), as shown in the Detail 1 Circle in Figure 18. The interlock is set at the factory and does not normally require field adjustment unless parts are replaced. When adjustment is required, proceed as follows:

5.7.3 To disable blasting and permit removal of the dustbin, the top of the bin must clear the switch, as shown in the Detail 2 Circle in Figure 18.

5.7.4 To adjust the switch:

5.7.4.1 Pull the latch handles up to lower the bin.

5.7.4.2 Loosen the switch's mounting nuts. Move the switch up or down as necessary to obtain approximately 1/4" between the bottom of the hopper flange and bottom of the switch's plunger, as shown in the Detail 3 Circle in Figure 18.

5.7.4.3 Tighten the screw to secure the switch and maintain the adjustment.

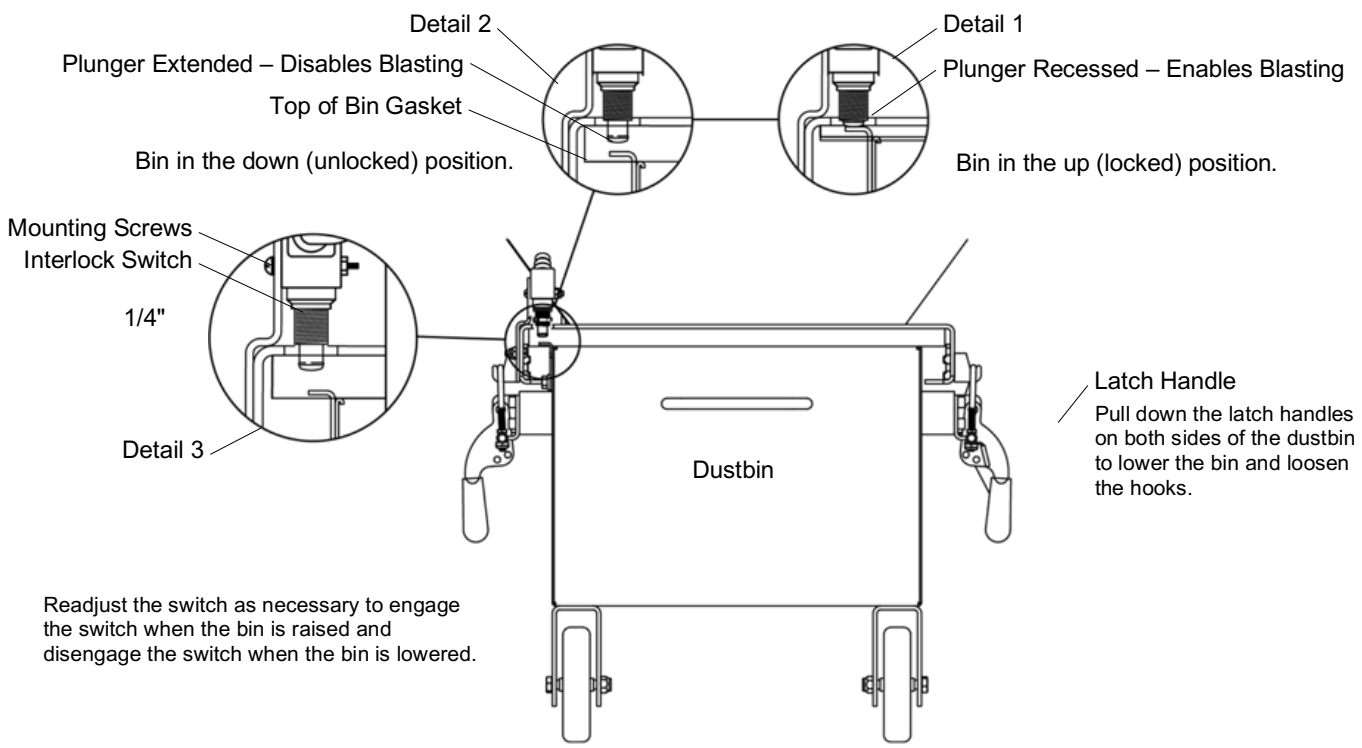

Figure 18

5.7.4.4 Pull the latch handles up to raise the bin and listen for the switch to engage (a click can be heard as the switch engages and disengages).

5.7.4.5 Readjust the switch as necessary to engage the switch when the bin is raised and to disengage the switch when the bin is lowered.

5.8 Dust–Collector Pulse Pressure – Figure 19

NOTIXE

Do not pulse new dust collectors or replacement cartridge until the cartridge is properly seasoned, per Section 7.13. Pulsing unseasoned cartridges can decrease the efficiency of dust collectors and cause premature cartridge failure.

5.8.1 Adjust pulse pressure using the regulator located on the power module, as shown in Figure 19.

5.8.2 Begin pulsing at 60 psi. To adjust pressure, pull up on the knob; a short snap as the knob is pulled up disengages it, as shown in Figure 19. Turn the knob clockwise to increase pressure or counterclockwise to decrease pressure. Once operating pressure is set, push down on the knob to secure it and maintain the setting.

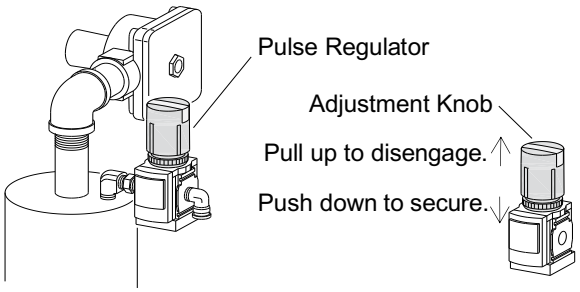

View from back of power module.
Some items removed for clarity.

Figure 19

NOTE: The blue insert on the adjustment knob locks and unlocks the knob, which prevents unintentional adjusting. While the knob is down, in the lock position, slide the insert to either side to lock it and back to center to unlock it, as shown in Figure 20.

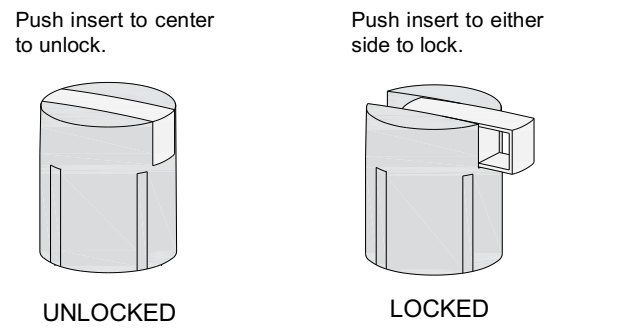

Figure 20

5.8.3 As the filter cartridge cakes with dust, differential pressure increases, and the pulse-pressure setting may not adequately clean the cartridge (does not reduce differential pressure below 4" WC, as noted on the differential-pressure gauge). When differential pressure reaches 4” WC, increase pulse pressure by increments of 10 psi, up to the maximum of 100 psi.

5.8.4 When the maximum pulse pressure of 100 psi is reached and pulsing does not lower differential pressure below the changeover pressure of 4" WC, decrease pulse OFF time to 20 seconds, per Section 5.9.2.

5.8.5 When differential pressure stays above 4" WC. after increasing pulse pressure to 100 psi and decreasing OFF time to 20 seconds, replace the cartridge, per Section 7.12.

5.9 Digital Pulse-Control Timer

The pulse timer is attached to the diaphragm pulse valve located on the dust collector pulse reservoir as shown in Figure 21.

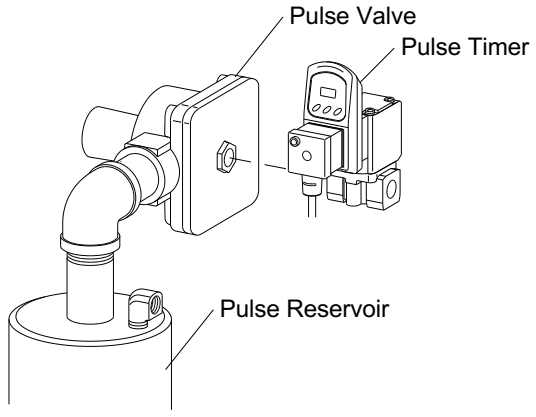

Figure 21

5.9.1 Operating principles Figure 22

NOTE: There is no need to set the timer <u>functions</u> or <u>subranges</u>.

If the <u>timer function</u> is accidentally changed, refer to Section 5.9.4 to reset it to Function "A".

If <u>timer subranges</u> are accidentally changed, refer to Section 5.9.5 to reset them to factory settings.

5.9.1.1 The LED display comes on when the green start pushbutton is pressed and power is supplied to the timer

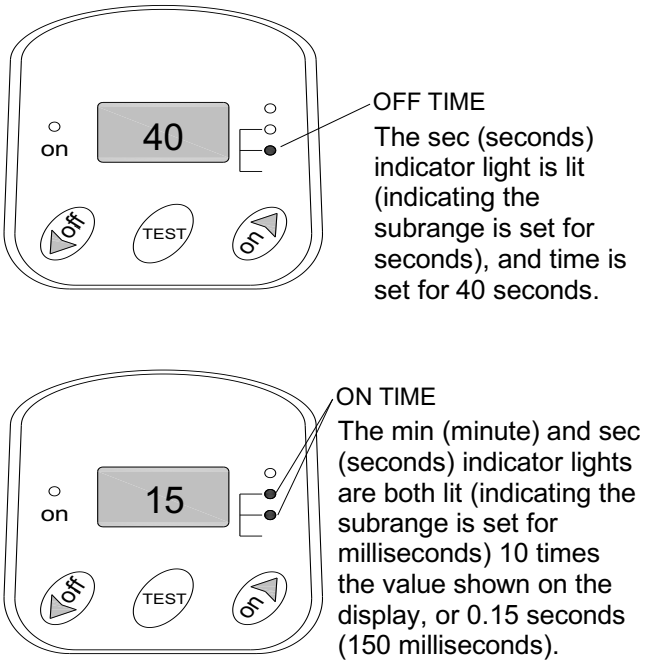

FACTORY SETTINGS

Figure 22

5.9.1.2 The timer is factory set at 40 seconds OFF and 150 milliseconds (0.15 second) ON, as shown in Figure 22. Every 40 seconds, the cartridge is pulsed for 0.15 second.

5.9.2 Setting pulse OFF time (time between each pulse) – Figure 23

NOTE: The numbers shown in Figure 23 signify the following step numbers:

1. Make sure the OFF subrange is set to seconds. The sec (seconds) indicator light should be lit, as shown in Figure 23. If the subrange is other than seconds, reset it as noted in Section 5.9.5.1.

2. Press the left "off" (arrow down) button until "OF" appears briefly on the LED display.
3. To decrease OFF time (for example, to change pulse OFF time from 40 seconds to 20 seconds), press the left "off" (arrow down) button until 20 seconds shows on the display.
4. To increase OFF time (lengthen time between pulses from 20 seconds to 40 seconds), press the right "on/arrow up" until 40 seconds shows on the display.

When the new OFF time appears on the display do not press anything; after a few seconds, the display starts flashing, indicating the new time is being saved. Once the new time is saved, the unit resumes operation with the new time setting.

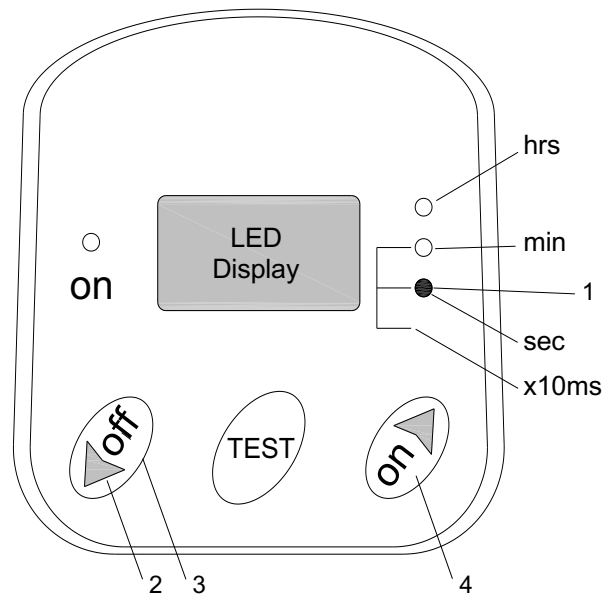

OFF TIME

Figure 23

NOTE: Do not adjust ON time. Adjusting ON time will consume additional air but will not improve cartridge cleaning. If ON time is accidentally changed, reset it to factory settings, per Section 5.9.3.

5.9.3 Reset pulse ON time to factory setting, 0.15 seconds (150 milliseconds).

NOTE: There is no need to change ON time. ON time is factory set for 150 milliseconds (0.15 second), as shown in Figure 22. If ON time is accidentally changed, reset it to 150 milliseconds as follows:

NOTE: The numbers shown in Figure 24 signify the following step numbers:

1. Make sure the ON subrange is set to milliseconds, as noted in Section 5.9.5.2, Figure 26.
2. Press the right "on/arrow up" button and ON appears briefly on the display.
3. If the number on the display is above 15, decrease time by pressing the left "off/arrow down" button until 15 appears.
4. If the number on the display is less than 15, increase time by pressing the right "on/arrow up" button until 15 appears.

When 15 appears on the display do not press anything; after a few seconds, the display starts flashing, indicating the new time is being saved. Once the new time is saved, the unit resumes operation with the new time.

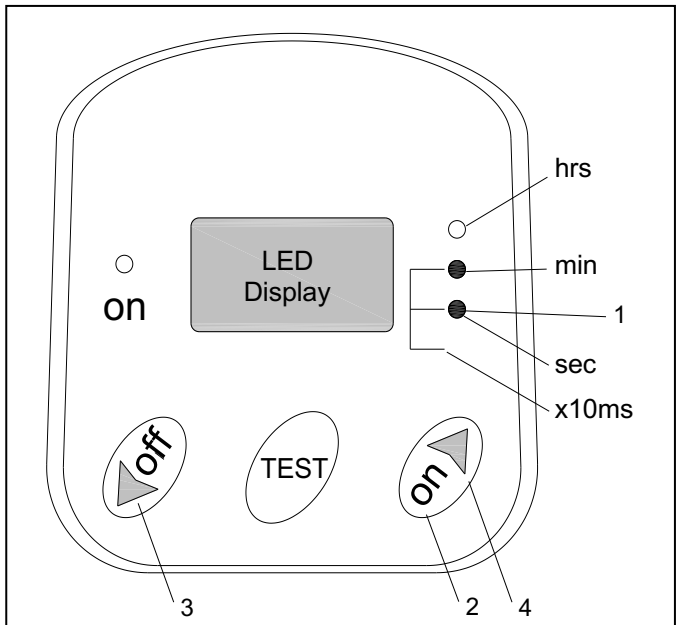

ON TIME FACTORY SETTING

Figure 24

5.9.4 Reset timer function to factory "A" setting

NOTE: There is no need to change the function setting. If the function is accidentally changed, reset it to the factory setting as follows:

1. Turn OFF the power switch located on the cabinet control console.
2. Press and hold down the timer "TEST" button and Switch ON the power switch.
3. Release the "TEST" button after the current timer function (A through F) appears on the display.
4. Use the "off/arrow down" or "on/arrow up" buttons to select function "A".

5. When "A" appears on the display, do not press anything; after a few seconds, the unit resumes operation with the "A" function.

5.9.5 Reset timer subranges to factory settings

NOTE: The OFF subrange is factory set for seconds, as shown in Figure 25. The ON subrange is factory set for milliseconds. Each value shown on the LED is 10 milliseconds (1/100 of a second), as shown in Figure 26. There is no need to change subranges; if subranges are accidentally changed, reset them to factory settings, as follows:

5.9.5.1 Reset OFF (time between each pulse) subrange to factory setting of seconds, as shown in Figure 25:

1. Press the left "off/arrow down" button and OF appears briefly on the display.
2. If the min (minute) subrange light is lit, decrease OFF subrange by pressing the left "off/arrow down" button until the sec (seconds) light is lit.
3. If the min (minute) and sec (seconds) subrange lights are both lit, increase OFF subrange by pressing the right "on/arrow up" button until only the sec light remains lit.
4. Set OFF time to suggested time, per Section 5.9.2.

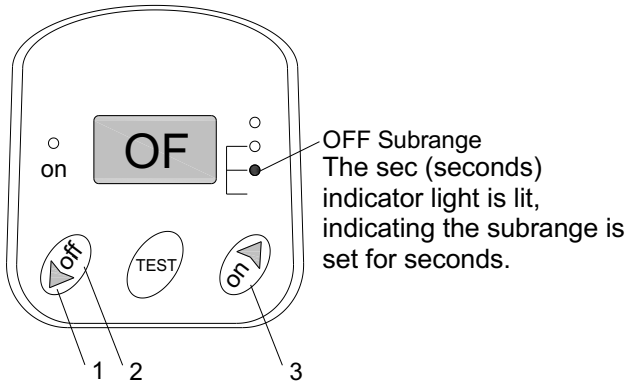

FACTORY SETTING FOR **OFF** SUBRANGE

Figure 25

5.9.5.2 Reset ON (duration of pulse) subrange to factory setting of milliseconds, as shown in Figure 26.

1. Press the right "on/arrow up" button, and ON appears briefly on the display.
2. To decrease ON subrange, press the left "off/arrow down" button until the min and sec indicator lights are both lit, indicating that the subrange is set for milliseconds x 10. For example, if the seconds subrange light is lit, press the "off/arrow down" button past 0 seconds to lower the subrange to milliseconds.
3. Set ON time to 15 (15 milliseconds x 10 = 150 milliseconds), per Section 5.9.3.

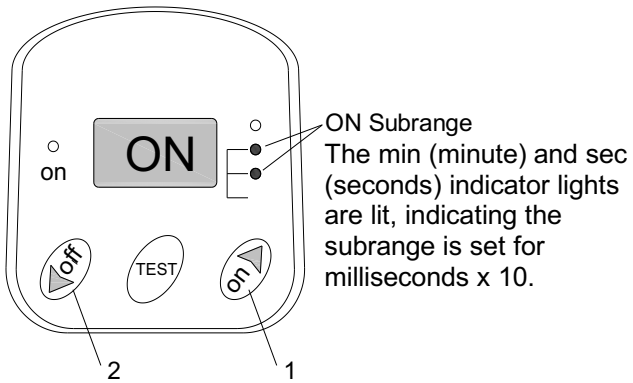

FACTORY SETTING FOR **ON** SUBRANGE

Figure 26

5.10 Using the Optional Manometer to Set Reclaimer Static Pressure

NOTE: These instructions and the illustrations in Figure 27 show two methods for taking static-pressure readings (negative pressure) on Pulsar reclaimers. Use the method best suited for the application. The instructions explain the processes for taking occasional readings and show how to install a fitting in the reclaimer body for taking frequent readings. Taking readings at different locations could produce slightly different readings. The readings are reference points, so readings should be taken using the same method each time they are taken.

5.10.1 Refer to instructions packed with the manometer for preparing and operating the manometer.

5.10.2 Open both manometer valves (elbows), at the top of the manometer, per the manometer instructions.

5.10.3 Push one end of the 3/16" ID tubing provided with the manometer, onto either one of the two valves.

5.10.4 Attach the manometer at a convenient location, as shown in the example in Figure 27. Magnets on the manometer hold it onto any metal surface on the power module. The manometer must be vertical, so the fluid is level on both sides.

5.10.5 Adjust the slide rule to align the zero with the fluid level. Refer to Figure 28.

5.10.6 Setup to take occasional readings

5.10.6.1 A **n**eedle used to take occasional readings is provided with the manometer kit. Leave the needle protector on the needle and insert the needle into the unused end of the manometer tubing. The ends of the tubing must fit tightly on the manometer and needle, as leaks will give inaccurate readings. Open the reclaimer's media fill door, remove the needle protector, and place the needle so the point is inside the door opening. Carefully close the door on the needle. The side of the needle embeds into the rubber door gasket, as shown in Figure 27, creating an airtight seal. Proceed to Paragraph 5.10.8 to take readings.

5.10.7 Setup to take frequent readings

5.10.7.1 Remove the pipe plug from the 1/4" NPT coupling located on the side of the reclaimer. Apply thread sealant to the male threads of the 1/4" NPT barb fitting provided with the manometer, and install the fitting into the coupling, as shown in Figure 27.

5.10.7.2 Place the unused end of the manometer tubing over only the first tapered barb on the barb fitting; pushing the tubing all the way onto the barb may make it difficult to remove. Proceed to Paragraph 5.10.8 to take readings.

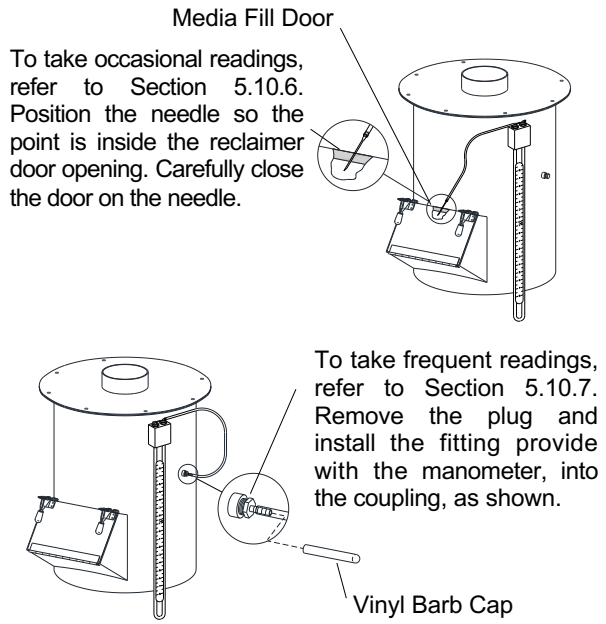

Figure 27

5.10.8 Taking readings

5.10.8.1 Open cabinet doors and turn the exhauster ON. The negative (static) pressure moves fluid in the tube. **NOTE: Readings must be taken with the cabinet doors open and with the exhauster running.**

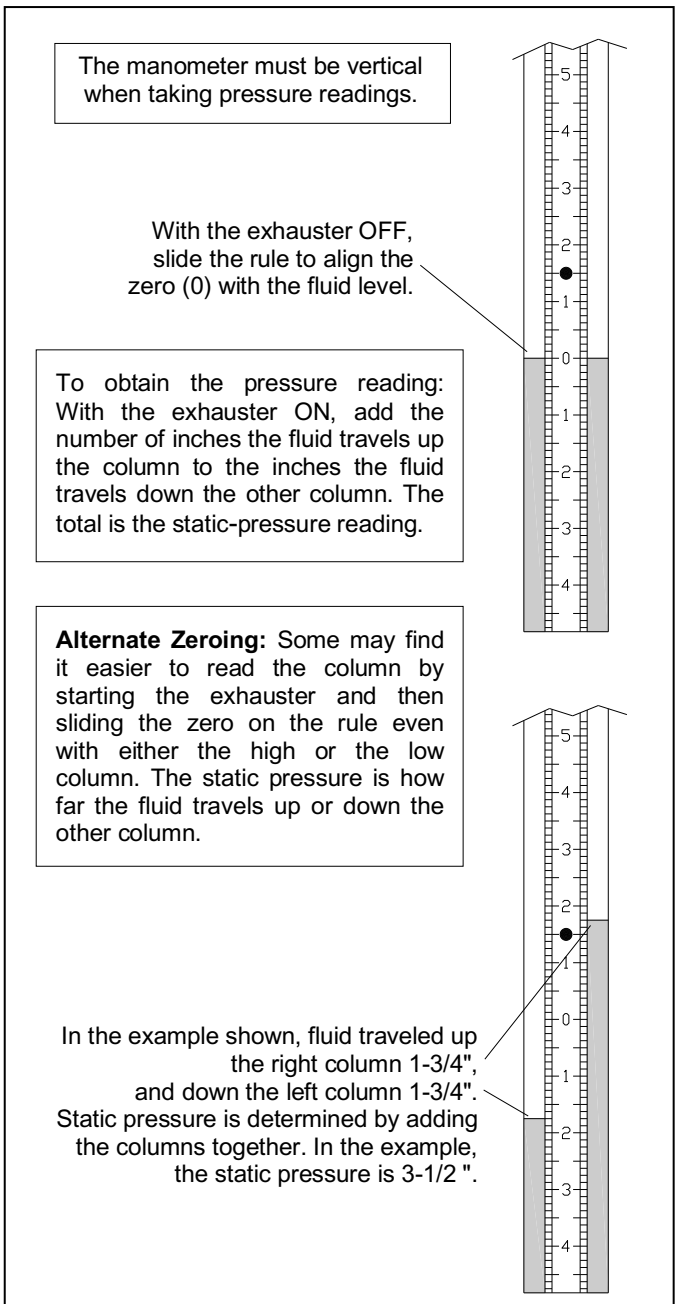

Figure 28

5.10.8.2 To find the static pressure, add the number of inches the fluid travels up one column to the inches the fluid travels down the other column. Refer to the example in Figure 28.

5.10.9 Adjust the exhaust damper, per Section 5.4, so the manometer matches the starting points noted in Paragraph 5.4.3.

5.10.10 After taking readings and making adjustments as needed:

5.10.10.1 When using a needle: Replace the needle protector, close the manometer valves, and store the manometer in the original container in a clean area.

5.10.10.2 When using a permanent fitting: The manometer may remain on the reclaimer body after both manometer valves are closed.

Or

Remove the vinyl tubing from the barbed fitting, close both manometer valves, and store the manometer in the original container in a clean area.

Place the vinyl barb cap, also provided with the manometer, over only the first tapered barb; pushing the cap all the way onto the barb may make it difficult to remove when taking later readings. Capping the fitting prevents leaks that alter the reclaimer's separation efficiency. Air drawn into the reclaimer causes carryover of good media to the dust collector.

6.0 PREVENTIVE MAINTENANCE

⚠ ΩΑΡΝΙΝΓ

Failure to wear an approved respirator and personal protection when servicing dust-laden areas of the cabinet and dust collector, as well as when emptying the dustbin, could result in lung disease, serious skin or eye irritation, or other health issues. Toxicity and health risk vary with type of media and dust generated by blasting. The respirator must be approved for the type of dust generated. Identify all material being removed by blasting and obtain a safety data sheet (SDS) for the blast media.

6.1 Inspection Notes

To avoid unscheduled downtime and to improve safety, establish an inspection schedule. Inspect all parts subjected to media contact, including the gun and nozzle, media hose, flex hose, wear plate, and all items covered in this section. Adjust the inspection schedule as needed, based on the following:

- **Usage:** Frequently used cabinets require more maintenance and inspections than those occasionally used.
- **Type of media:** Aggressive media wears parts faster than nonaggressive media.
- **Condition of parts being blasted:** Heavily contaminated parts require more maintenance to the cabinet's media recovery system.
- **Friability of media:** Media that rapidly breaks down require more maintenance to the cabinet's media recovery system and dust collector.

6.2 Daily Inspection and Maintenance Before Blasting with the Air OFF

6.2.1 Check media level: Check media level in reclaimer and refill, as necessary.

6.2.2 Inspect reclaimer debris screen and door gasket: Check reclaimer debris screen for debris. The screen is accessible through the reclaimer door. With the exhauster OFF, remove the screen and empty it daily or when loading media. Empty the screen more often if part blasted causes excessive debris. Do not operate the machine without the screen in place; oversized byproduct from blasting could plug the nozzle. While the door is open, inspect the door gasket for wear or damage. Replace the gasket at the first sign of wear.

6.2.3 Drain compressed-air filter: The cabinet is equipped with a twist-type manual-drain air filter. Drain the filter at least once a day, and more often if water is present. Moist air inhibits the flow of media. Drain the air line and receiver tank regularly. If the filter does not remove enough moisture to keep media dry and flowing, it may be necessary to install an air dryer or aftercooler in the compressed-air supply line.

6.2.4 Inspect dustbin – Figure 29

NOTIXE

Inspect dust level in the dustbin daily. Empty the dustbin when no more than half-full and when adding new media. Failure to monitor the dust level will overfill the collector, requiring extensive cleaning.

6.2.4.1 Empty the dustbin regularly. Start by checking the container at least daily and when adding media, then adjust frequency based on usage, contamination, and friability of the media.

6.2.4.2 Turn off the exhauster and unlatch the bin from the dust collector, as shown in Figure 29.

6.2.4.3 Roll the bin from under the dust collector, tie off the dust bag, and place it into a suitable disposal receptacle.

Note: Placing a suitable dust bag in the dustbin makes it easier to empty and easier to contain dust. The bag must not interfere with the bin interlock switch.

6.2.4.4 Roll the bin under the dust collector, making sure the interlock switch clears the top of the bin as it is moved into place.

NOTIXE

Make sure the dustbin interlock switch clears the top of the bin when the bin slides under it and that the bin engages the switch when it is raised and latched into place. Refer to Section 5.7 to adjust the bin interlock switch.

6.2.4.5 Clip both latch hooks into the latch brackets and raise both latch handles to raise the bin, and then latch it in place.

6.3 Daily Inspection During Blasting – Have Someone Do the Following:

6.3.1 Inspect cabinet for dust leaks: During operation, inspect cabinet door seals for media leaks.

6.3.2 Check exhaust air for dust: Dust discharge at the outlet indicates a leaking or damaged filter cartridge. Check immediately. Note that a small amount of dust egress is normal for a short time before a new cartridge is seasoned.

6.3.3 Drain pulse reservoir – Figure 30: At the end of the day, open the petcock to drain water from the reservoir and bleed air from the supply line. Close the petcock when the line is bled.

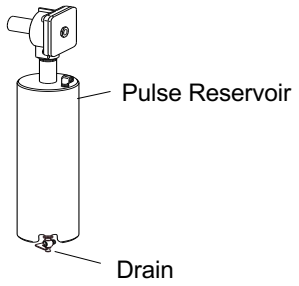

Figure 30

6.4 Weekly Inspection and Maintenance Before Blasting with Air OFF

6.4.1 View-window cover lens: Inspect the window cover lens. Replace as needed, per Section 7.4.

6.4.2 Gloves: Inspect gloves for wear. The first sign of deterioration may be excessive static shocks. Replace as needed, per Sections 7.1 and 7.2.

6.4.3 BNP® gun assembly: Inspect internal parts of the BNP gun for wear. Inspection and replacement of the air jet cover before it wears through prolongs the life of the jet. Replace parts as needed, per Section 7.3.

6.4.4 Media hose: Inspect media hose for thin spots by pinching it every 6 to 12 inches. Replace the hose when it becomes soft.

6.4.5 Dust-collector's inline filter: Check for dust accumulation and empty it as needed. Dust can be seen through the filter's transparent housing. Clean filter as needed, per Section 7.14.

6.5 Weekly Inspection During Blasting – Have Someone Do the Following:

6.5.1 Flex hoses: Inspect flex hoses for leaks and wear.

6.6 Monthly Inspection and Maintenance

6.6.1 Reclaimer wear plate: Remove the flex hose from the reclaimer inlet and use a light to inspect the reclaimer wear plate. If the rubber is worn through to the backing metal, replace the wear plate per Section 7.11.

6.7 Additional Dust-Collector Cartridge Pulsing: When compressed air is supplied to the pulse reservoir and the power-supply toggle switch is ON (exhauster running), the cartridge is pulsed at regular timed intervals. When differential pressure, as shown on the differential-pressure gauge, remains between 3" and 4" WC, additional pulsing can be done by doing one of the following:

- Run the exhauster for a short time after the blast cycle is completed.
- With the exhauster OFF, quickly press and release the test button on the timer two or three times. **NOTE: Rapid repetitive pulsing with the exhauster OFF may cause dust leakage.** Start the exhauster and wait 5 or 10 seconds for dust to clear and then repeat the process as needed.

7.0 SERVICE MAINTENANCE

⚠ ΩΑΡΝΙΝΓ

Prior to doing any maintenance or opening the dust collector, the employer must meet required OSHA standards, including but not limited to 29 CFR 1910 for:

- **Appropriate Respirator**
- **Protective Clothing**
- **Toxic and Hazardous Substances**
- **Fall Protection**
- **Lockout and Tagout**

All dust is hazardous to breath; toxicity and health risks vary with type of dust generated by blasting. Prolonged exposure to <u>any</u> dust can result in serious lung disease and death. Short-term exposure to toxic materials, such as lead dust or dust from other heavy metals and corrosives, can cause serious injury or death. Identify all material that is being removed by blasting and obtain a Safety Data Sheet (SDS) for the blast media. Waste dust in the collector can cause serious injury or death through inhalation, absorption, or ingestion. The employer shall meet all OSHA requirements, including but not limited to those for confined space, combustible dust, fall protection, hazard communication, and lockout and tagout procedure for electrical and pneumatic supply.

7.1 Glove Replacement – Figure 31

7.1.1 Special static-dissipating gloves are provided for operator comfort. Gloves need to be replaced as they wear. The first sign of deterioration may be excessive static shocks.

7.1.2 Remove old gloves: Glove gauntlets are stretched over glove mounts and held in place with hook and loop straps. To remove the old gloves, loosen the straps by pulling the hook end of the straps away from the loop material, as shown in Figure 31, and then pull the straps and gloves off the mounts.

7.1.3 Attach new gloves: The gauntlet end of the gloves are stretchable. To install a glove: stretch the gauntlet over the glove mount's ridge, placing it against the front of the cabinet.

7.1.4 Place the smooth side of the strap over the attached glove. Insert the strap end through the buckle and pull the strap taut. While keeping the strap taut, fasten the straps by pressing the hook end into the loop material.

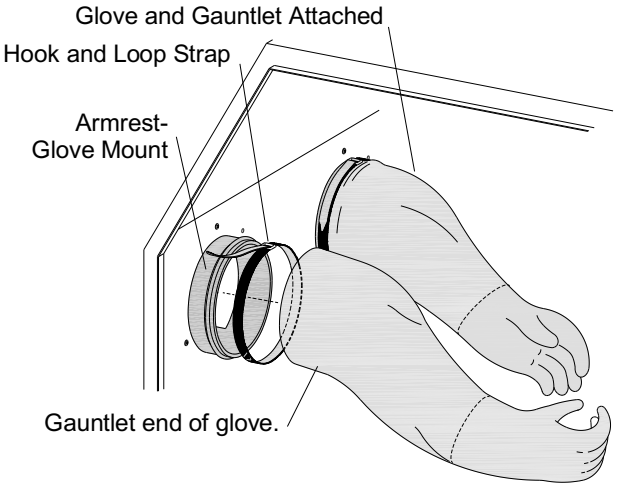

Figure 31

7.2 Quick-Change Gloves and Glove Mounts Figure 32

7.2.1 Some operators prefer to have gloves assigned to them and remove them after their shifts. The quick-change glove ports provide fast changeover of gloves and armrest-glove mounts.

7.2.2 Attach gloves to the glove mounts, as noted in Section 7.1.

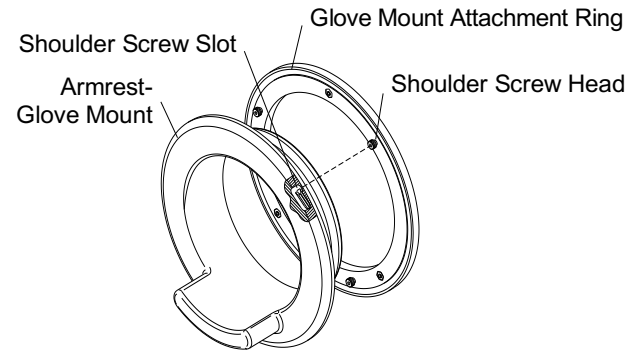

Mounting screws and slots as viewed from outside of the cabinet.

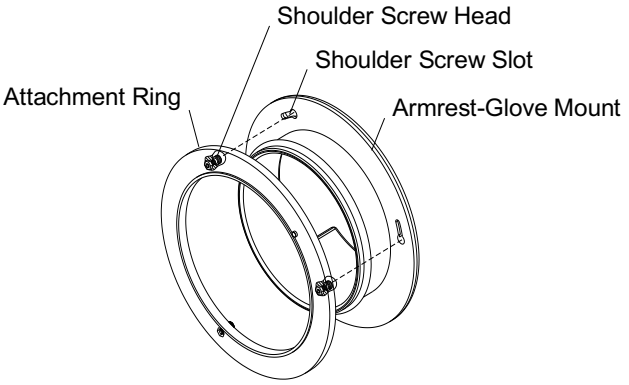

Mounting screws and slots as viewed from inside of the cabinet.

Figure 32

7.2.3 Unlock the glove mounts and gloves from the attachment rings by turning them counterclockwise.

7.2.4 Remove the glove mount and glove from the cabinet by pulling the gloves through the glove ports.

7.2.5 To reattach the glove mount and glove, place arms into the replacement gloves and insert both gloves through both glove ports.

7.2.6 Align the slots in the glove mount with the shoulder screw heads on the attachment ring, push in on the glove mount, and then turn it clockwise to lock it.

7.3 BNP® Gun Assembly – Figure 33

7.3.1 Replace the nozzle when its orifice diameter has worn 1/16" larger than its original size or when suction diminishes noticeably. To change the nozzle, unscrew the holding nut from the gun end and pull the nozzle from the gun. Inspect the nozzle O-ring and replace if worn or damaged. Insert a new O-ring and nozzle, placing the tapered end toward the jet. Screw the holding nut onto the gun.

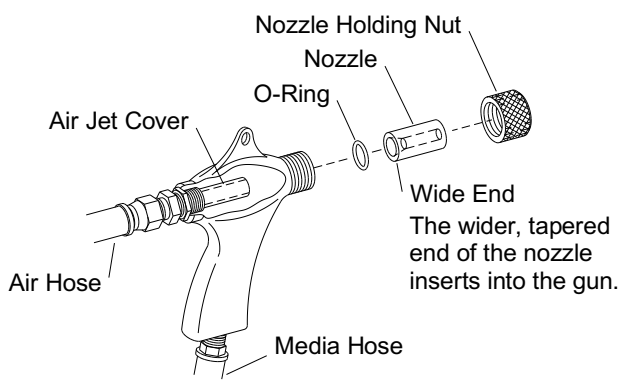

Figure 33

7.4 View-Window Cover Lens

7.4.1 Rapid frosting of the view window can be avoided by directing ricocheting media away from the window and by installing a cover lens on the inside surface of the window. Using cover lenses prolongs the life of the view window.

7.4.2 The best way to install a cover lens is to remove the window from the cabinet. If, for some reason, it is not practical to remove the window, the lens may be applied with the window glass in place.

7.4.3 To install a cover lens, carefully remove the adhesive backing making sure the adhesive remains on the lens, and apply the lens to the clean, dry inner surface of the view window. When the cover lens becomes pitted or frosted, replace it.

7.5 View-Window Replacement

⚠ ΩΑΡΝΙΝΓ

Do not use plate glass for replacement view windows. Plate glass shatters on impact and can cause severe injury. Use only genuine ZERO® laminated replacement glass.

7.5.1 Remove the two window-frame nuts located on the upper edge of the window frame and swing the window frame open. If the frame is to remain open, for cleaning or other reasons, remove it, per Section 7.7.

7.5.2 Remove the old window.

7.5.3 Inspect the window-frame gaskets on both the window frame and on the cabinet. If either gasket is damaged, replace it, per section 7.6.

7.5.4 Install a view-window cover lens, per Section 7.4.

7.5.5 Set the new window (cover lens down) squarely over the window opening, making sure that all edges of the window are centered and overlapping the window gasket, and that the window is resting on the window support tabs.

7.5.6 Swing the window frame into place and tighten the frame nuts.

7.6 Window-Gasket Replacement – Figure 34

7.6.1 Inspect the gaskets when changing the view window. Replace the window-frame gasket and cabinet window-opening gasket at the first sign of media leakage around the view window, or if gaskets are worn or otherwise damaged.

7.6.2 Remove the window and window frame, per Sections 7.5 and 7.7.

7.6.3 Remove all the old gasket material and clean the surfaces of the cabinet and window frame.

7.6.4 Peel a short section of adhesive backing from the 5/16″-thick strip gasket and adhere the gasket to the center of the top edge of the window opening, as shown in Figure 34. Peel additional backing as needed and work the strip around the radius of each corner, pressing it firmly to bond. Trim the gasket to fit and compress the ends to seal.

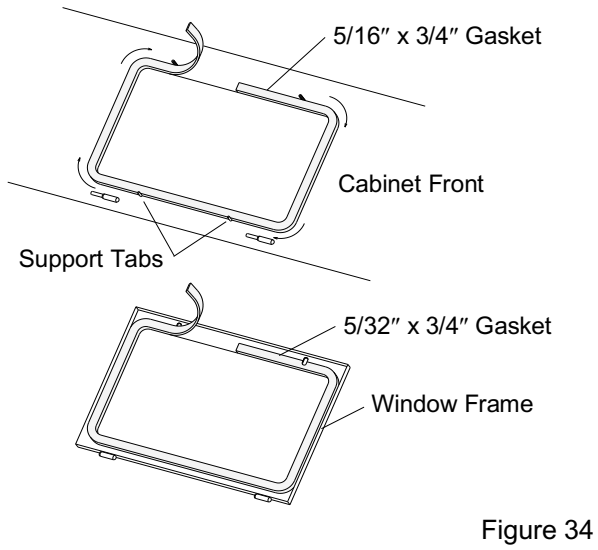

Figure 34

7.6.5 Using 5/32″-thick strip gasket, repeat the process on the underside of the window frame.

7.6.6 Trim around the window-frame bolt slots, as needed.

7.7 Window-Frame Removal – Figure 35

7.7.1 Remove the two window-frame nuts located on the upper edge of the window frame and swing the window frame open.

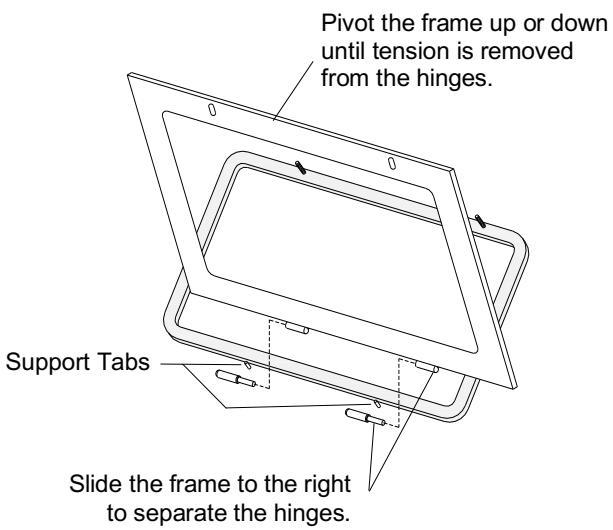

Figure 35

7.7.2 Remove the window to prevent breakage.

7.7.3 Pivot the window frame up or down until tension is off the frame hinges.

7.7.4 Slide the frame to the right to remove. The hinges separate, as shown in Figure 35.

7.7.5 Replace the frame in reverse order. Slide the frame as necessary to align the top bolt holes with the bolts.

7.7.6 Set the window squarely over the window opening. Make sure that all edges of the window are centered and overlapping the window gasket, and that the window is resting on the window support tabs.

7.7.7 Swing the window frame into place and tighten the frame nuts.

7.8 LED Light Assembly – Figure 36

⚠ ΩΑΡΝΙΝΓ

Use an approved stepladder when servicing the light assembly. Do not climb on top of the cabinet. The cabinet top will not support the weight of a person. Failure can result in injury and property damage.

7.8.1 Remove LED light assembly

7.8.1.1 Turn OFF electrical power.

7.8.1.2 Remove the four nuts and washers (save them to reuse) that attach the light assembly to the cabinet, lift the light off the diffuser, as shown in Figure 36. Set the light out of the way and within reach of the cord.

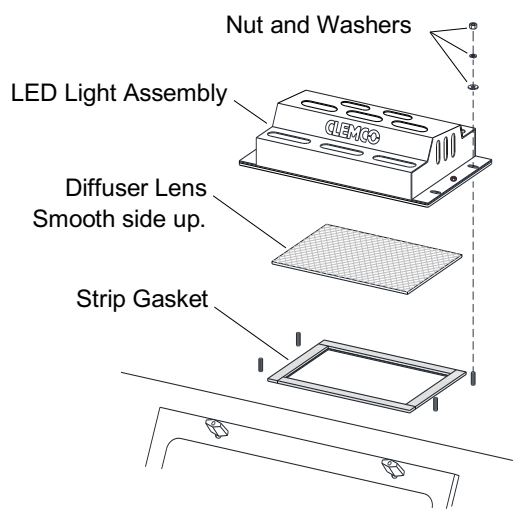

Figure 36

7.8.2 Diffuser lens replacement

7.8.2.1 Remove the light assembly, as noted in Section 7.8.1.

7.8.2.2 Lift the diffuser lens off the gasket. Inspect the gasket and replace it per Section 7.8.3, if the gasket is compressed or otherwise damaged, per Section 7.8.2, before centering the new diffuser (smooth side up) over the gasket.

7.8.2.3 Set the light assembly on the diffuser and reattach it using the existing nuts and washers.

7.8.3 Gasket replacement

7.8.3.1 Remove the light assembly, as noted in Section 7.8.1.

7.8.3.2 Remove all the old gasket material and clean the surface of the cabinet.

7.8.3.3 Lay a length of strip gasket along a long edge of the light opening and cut to length, allowing 3/4″ overlap on each end. Peel the adhesive backing and adhere the strip gasket to the edge of the opening, as shown in Figure 36. Press the gasket to bond the adhesive to the cabinet. Repeat the process on the remaining sides, compressing the ends to seal

7.8.4 LED light assembly replacement

7.8.4.1 Turn OFF electrical power and perform lockout and tagout procedure to the power supply.

7.8.4.2 Remove the light assembly, per Section 7.8.1.

7.8.4.3 Remove the junction-box cover and note the wire connections. Current connections are as follows:

- Black wire ..... Hot
- White wire ..... Neutral
- Green wire ..... Ground

If color coding is different from that shown above, make note of the color code before disconnecting the wires.

7.8.4.4 Loosen the strain-relief compression nut and remove the cord from the junction box.

7.8.4.5 Place the new light assembly in position on the cabinet and route the cord through the strain relief and into the junction box.

7.8.4.6 Cut the cord to length and wire as follows:

- Black wire ..... Hot
- White wire ..... Neutral
- Green wire ..... Ground

7.8.4.7 Apply power to test the light.

7.8.4.8 Tighten the strain-relief compression nut, set the light assembly on the diffuser, and reattach it using the existing nuts and washers.

7.9 Tube-Lock Fittings – Figure 37

⚠ ΩΑΡΝΙΝΓ

Failure to observe the following procedure before performing any maintenance can cause injury from the sudden release of trapped compressed air.

- **Lockout and tagout the compressed-air supply.**
- **Bleed all compressed air-supply lines.**

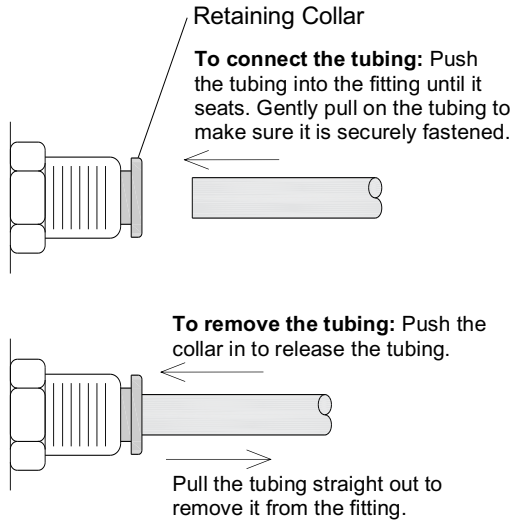

Figure 37

7.9.1 To remove the tubing, push the retaining collar toward the fitting, which releases the tubing so it can be easily removed by pulling it out. Do not force it; only a slight pull on the tubing is required if the retaining collar is pushed in correctly.

7.9.2 Reconnect the tubing by inserting it through the collar until it seats. Tug on the tubing to make sure it is secured.

7.10 Servicing Pneumatic Inlet Assembly – Figure 38

⚠ ΩΑΡΝΙΝΓ

Turn off the compressed-air supply, bleed the supply line and perform lockout and tagout procedure to the air-supply line. Failure to do so can cause injury from the release of trapped compressed air

7.10.1 To service or replace any module in the pneumatic inlet assembly, the mounting clips that attaches it to the part next to it must be loosened or removed. Use a TORX T20 screwdriver to loosen the mounting screws enough to remove the part. NOTE: If a TORX-T20 is not available use a flat-blade screwdriver that fits into the slot.

7.10.2 Modules are sealed against the one next to it with an O-ring. The O-ring must be in place before reattaching them to the mounting bracket.

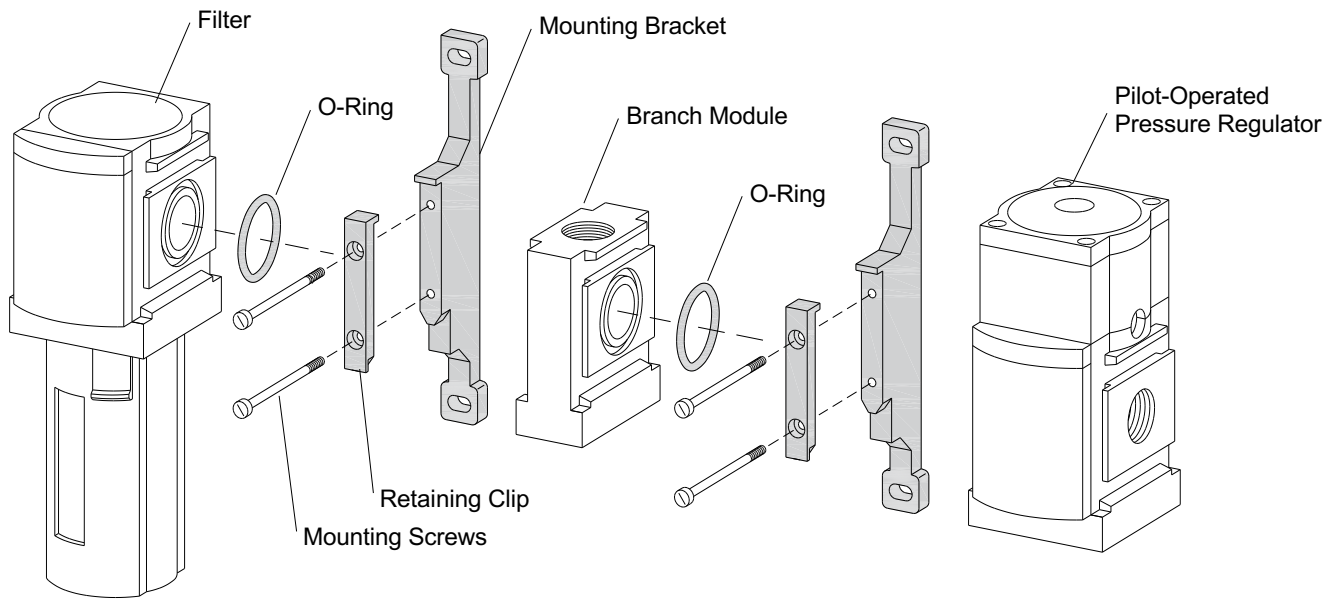

Figure 38

7.10.3 After installing the O-ring, place the part against the one next to it, making sure the flanges on the parts fit into the recess on the bracket, as shown in Figure 39.

7.10.4 Press the parts together and insert the retaining clip over the mounting flanges and torque the screws to 1.2 N m (10.6 lbf in).

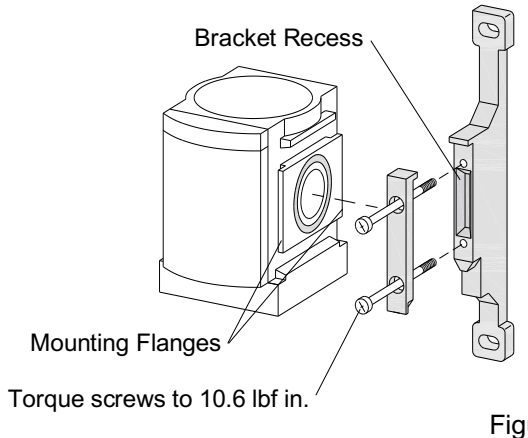

Figure 39

7.11 Replacing Reclaimer Wear Plate

⚠ ΩΑΡΝΙΝΓ

To access wear-plate mounting screws, the reclaimer must be removed from the power module. Pulsar reclaimers weigh about 100 lbs. When removing and installing the reclaimer, it must be adequately supported and secured to appropriate lift equipment. Failure to secure and use proper lift device can result in injury.

Installation Notes: Make sure an inlet-pipe gasket, Stock No. 11746, is available to replace a compressed or damaged gaskets on the reclaimer inlet.

7.11.1 Remove the flex hose from the reclaimer inlet.

7.11.2 Remove the reclaimer inlet-pipe adaptor, adaptor gasket, and old wear plate. The wear plate is held in place by screws attached from the outside of the reclaimer. Remove the screws and pull out the wear plate through the reclaimer inlet.

7.11.3 Remove remnants of old caulk that will prevent the new wear plate from seating against the reclaimer wall and top.

7.11.4 Angle the new wear plate into the reclaimer inlet and position it so the straight end is flush with the inlet. Use locking pliers, clamps, or other means to hold the wear plate in position, making sure the leading edge of the wear plate is aligned with the reclaimer inlet and that the top edge is even with the top of the reclaimer.

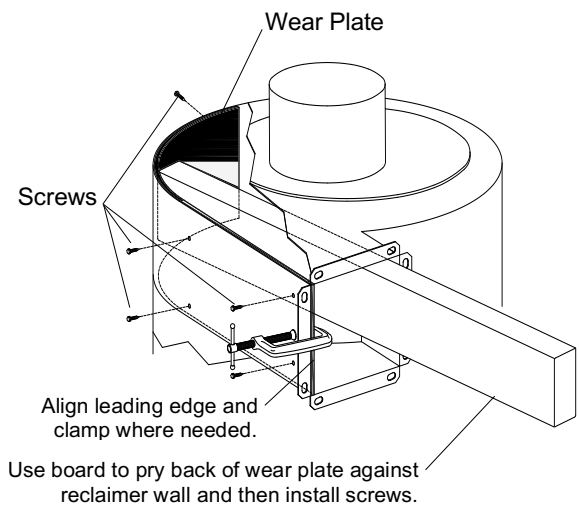

Figure 40

7.11.5 Install the front-two sheet metal screws through the old screw holes to secure.

7.11.6 Use a board or similar object as leverage to pry the wear plate against the inner wall of the reclaimer, as shown in Figure 40.

7.11.7 New self-drilling sheet metal screws are provided with the wear plate. While forcing the wear plate against the reclaimer wall, install the screws through the remaining screw holes to secure. Rearrange the pry board as needed to press the wear plate against the reclaimer wall when installing screws.

7.11.8 To avoid rapid wear, apply RTV caulk to fill gaps at the seams on the top, bottom, and leading edge of the wear plate

7.11.9 Use a new inlet gasket and reattach the inlet-pipe adaptor.

7.11.10 Connect the flex hose to the inlet pipe adaptor.

7.11.11 Allow time for the caulking to cure before putting the reclaimer into service.

7.12 Replacing Filter Cartridge – Figures 41 and 42

⚠ ΩΑΡΝΙΝΓ

NO DUST IS SAFE TO BREATHE.
The inhalation of airborne dust can lead to serious respiratory illness and death, serious skin or eye irritation, or other health issues. Always wear approved respiratory protection when servicing the dust collector, while handling filter cartridges, and when emptying the dustbin. Toxicity and health risks vary with type of media and dust generated by blasting. The respirator must be approved for the type of dust generated. Identify all material being removed by blasting and obtain a safety data sheet (SDS) for the blast media.

7.12.1 Close the air-supply valve and open the drain to bleed air from the pulse reservoir.

7.12.2 Refer to Figure 41 and remove the dust-collector access door:

1. Remove the retaining knob at the bottom of the door.
2. Swing the bottom of the door away from the dust-collector access opening.
3. Lift the door off the top support angle.

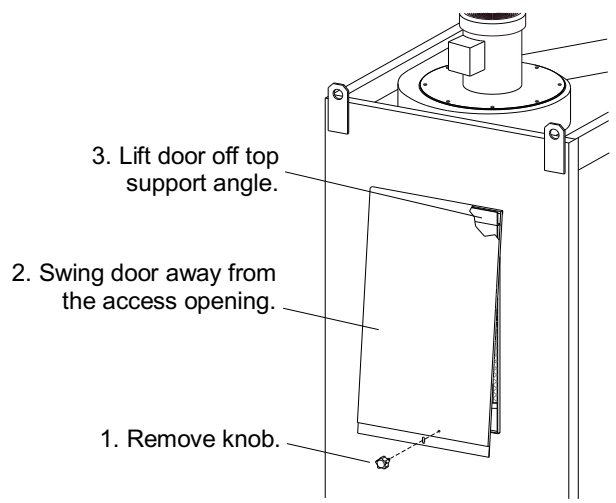

Figure 41

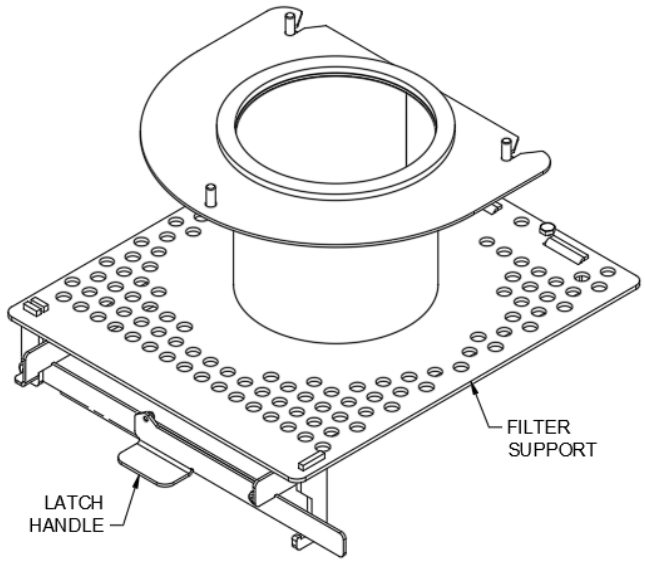

Figure 42

7.12.3 See Pulsar Plus Filter change tutorial video to remove and install filter.

Quick Change Filter Assembly
Pulsar III Stock No. 31541
Pulsar VI Stock No. 31563
See 3.5 for field installation instructions of quick change filter support

7.13 Seasoning Filter Cartridge

NOTIXE

Do not pulse a new dust collector or replacement filter cartridge until the cartridge is properly seasoned. Pulsing unseasoned cartridges can decrease the efficiency of dust collectors and cause premature cartridge failure.

7.13.1 New cartridges must be seasoned. The cartridge is seasoned by letting a dust cake develop on the filter media before starting the pulsing cycle.

7.13.2 Pause the pulse cycle by turning the pulse-pressure regulator OFF (to 0 psi). NOTE: Pulse timing is controlled with the digital pulse timer and air pressure. If pulse pressure is set to any pressure other than 0 psi, the pulse automatically starts whenever the dust-

collector exhauster is started by pushing the green start button on the control console. If pulse pressure is set to 0 psi, the timer is still functioning but there is no pulse because air pressure is turned off.

7.13.3 Operate the collector without pulsing until the differential-pressure gauge reads 4 inches (4" WC). At that point, turn the pulse regulator to 60 psi, per Section 5.8, and the set pulse OFF time to 40 seconds, per Section 5.9.2. Switch the power toggle switch to ON to start the exhauster and pulse cycle.

7.14 Clean Dust-Collector's Inline Filter – Figure 43

7.14.1 To avoid cartridge pulsing during cleaning, make sure power is OFF (red pushbutton is pressed). Refer to the matching step numbers in Figure 43 and clean the filter as follows:

1. Remove the filter and tubing from the lower snubber by pushing in on the snubber's retaining collar and pulling the tubing from the snubber, per instructions in Section 7.9.

2. Push the locking tab UP to release it from the small projection on the bottom cap.

3. Rotate the bottom cap to the left to release it and pull the cap down to remove it from the filter body. **Note: The filter element is loose at this point and may fall off the bottom cap.**

4. Remove the filter from the bottom cap and remove accumulated dust from the filter and filter body. Replace the filter if the element or body is damaged or otherwise faulty.

5. Place the filter onto the bottom cap and insert the bottom cap into the filter body. Rotate the bottom cap while gently pushing it upward until it moves into place. Push the bottom cap against the bottom of the filter body and turn it to the right until the projection is below the locking tab.

6. Pull the locking tab down, over the projection to lock the cap to the body.

7. Replace the tubing into the snubber, per Section 7.9.

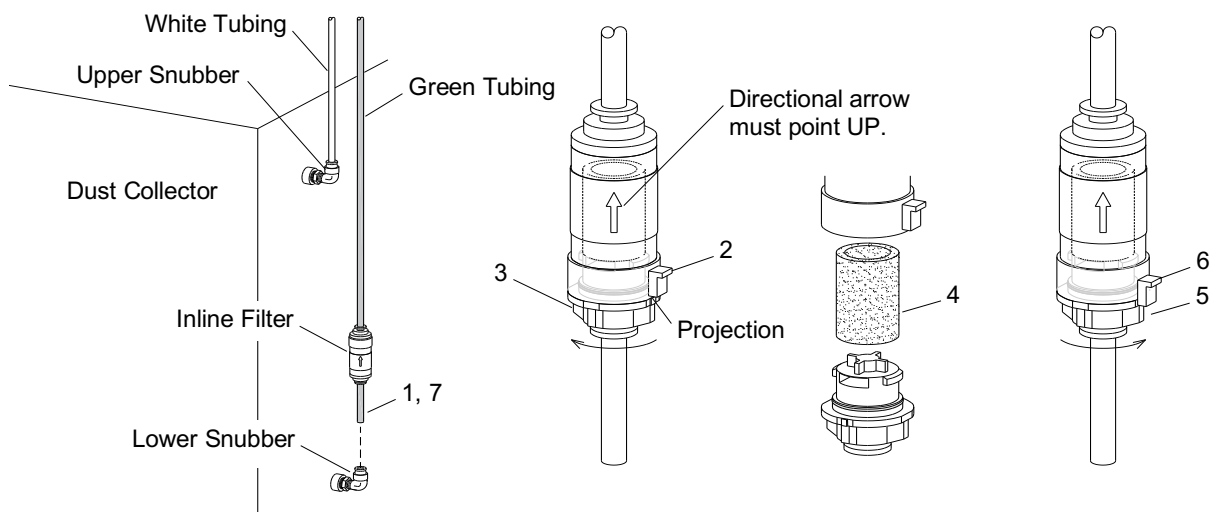

Figure 43

7.15 Clean Dust-Collector's Snubber Fittings Figure 43

7.15.1 Continually high differential pressure can be caused by the tiny orifice on the back side or the snubber being plugged with caked dust.

7.15.2 Remove the tubing from the snubber, as instructed in Section 7.9.

7.15.3 Remove the lower snubber from the bushing in the dust-collector port. Clean dust from the orifice at the backside of the fitting and reinstall the fitting. Replace the fitting if it is damaged or otherwise faulty.

7.15.4 Replace the tubing into the snubber fitting.

7.15.5 Repeat the process on the upper snubber.

7.16 Diaphragm Pulse Valve

⚠ ΩΑΡΝΙΝΓ

Before servicing the diaphragm pulse valve or pulse timer, lockout and tagout compressed air and electrical power, and drain compressed air from the pulse reservoir. Failure to do so can cause injury from the release of trapped compressed air and/or electrical shock.

7.16.1 Loosen the connector screw and unplug the electrical connector from the timer, as shown in Figure 44.

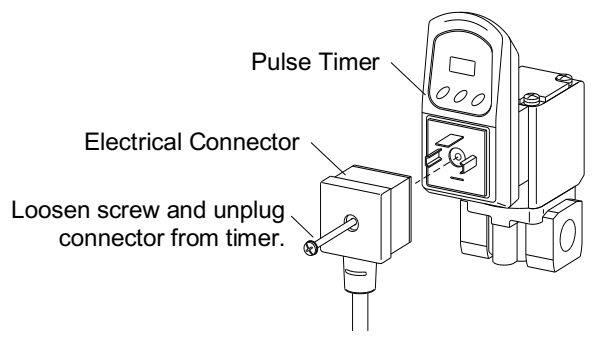

Figure 44

7.16.2 Remove the four cover screws and remove the cover, while keeping the diaphragm in place within the body. **NOTE: Before removing the diaphragm and O-ring, note the round dimple on the upper left on the valve body and the position of the triangular shape on the upper left of the diaphragm, as shown in Figure 45. When reinstalling the diaphragm, the marks must be aligned as shown.**

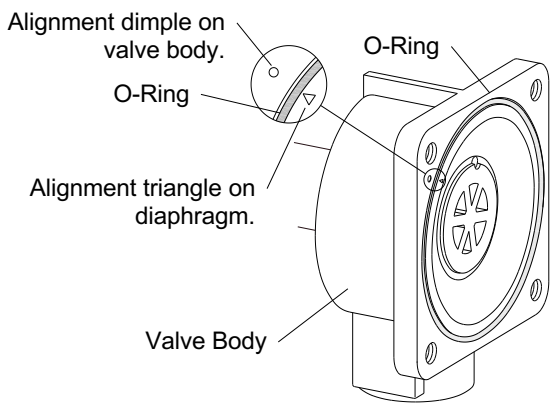

Figure 45

7.16.3 Reassemble using the new diaphragm and O-ring from the service kit, making sure the diaphragm is correctly aligned, as noted in Figures 45 and 46, and that the O-ring is seated into the groove.

NOTIXE

If the diaphragm or O-ring are installed incorrectly, it can cause an external leak and valve malfunction.

7.16.4 While holding the diaphragm and O-ring in position, place the cover and hold it while tightening the four screws enough to hold the cover in place.

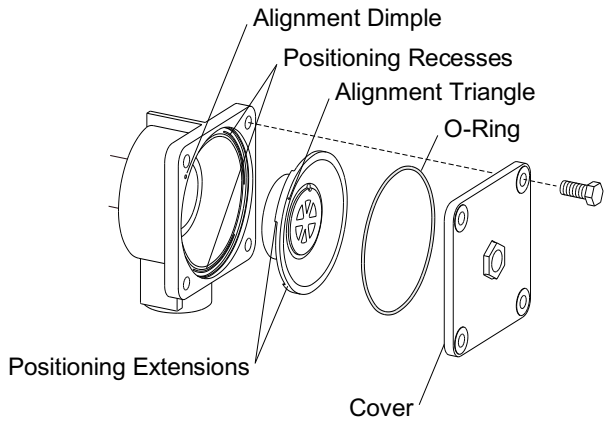

Figure 46

7.16.5 Tighten the four bolts diagonally to secure. If a torque wrench is available, tighten to 110 to 122 lbf in.

7.16.6 Reattach the electrical connector to the timer.

8.0 TROUBLESHOOTING PNEUMATIC and MECHANICAL

Refer to Section 9.0 to troubleshoot electrical problems.

⚠ ΩΑΡΝΙΝΓ

To avoid serious injury, observe the following when troubleshooting:

- **Turn OFF the compressed-air supply, bleed the supply line, and lockout and tagout the air supply.**
- **If checking the controls requires air, always enlist the aid of another person to:**
  - **Hold the blast gun securely.**
  - **Operate the foot pedal.**
- **Never bypass the foot pedal or wedge it in the operating position.**
- **Never bypass the door interlock system.**
- **Follow all OSHA regulations, including lockout and tagout procedures.**

8.1 Poor visibility/dusty media

8.1.1 Dirty filter cartridge. Empty the dustbin. Pulse cartridge several times, per Section 6.7. Inspect the cartridge and replace it when necessary, per Section 7.12.

8.1.2 Exhauster motor not operating. Check voltage to motor and motor wiring. Refer to Section 9.2.

8.1.3 Check rotation of exhauster motor. The motor should rotate as indicated by the arrow on the housing. If it does not rotate in the proper direction**, lockout and tagout electrical power** and switch motor leads, as shown on the motor plate.

8.1.4 Using friable media that rapidly breaks down, or using media that is too fine or worn out. Check condition of media.

8.1.5 Exhaust damper closed too far, restricting air movement through the cabinet. Adjust static pressure, per Section 5.4.

8.1.6 Inlet damper closed too far, restricting air movement into the cabinet. Adjust damper, per Sections 2.5 and 5.5.

8.1.7 Reclaimer door open. Check door.

8.1.8 Hole worn in flex hose between cabinet hopper and reclaimer inlet, or reclaimer outlet and dust collector inlet. Replace hose.

8.1.9 Obstruction in flex hose between the cabinet hopper and reclaimer inlet. Inspect hose for blockage.

8.1.10 Paddle wheel worn. Check wheel for wear.

8.1.11 Pulse pressure set too low. Refer to Section 5.8 to adjust pulse pressure.

8.1.12 Pulse OFF time needs to be decreased. Refer to Section 5.9.2 to reset OFF time.

8.1.13 Digital auto-pulse timer may not be operating. Refer to Section 9.6.1 to check timer.

8.2 Abnormally high media consumption

8.2.1 Door on reclaimer open or worn door gasket. Air entering the reclaimer around the door causes media carryover to the dust collector. Inspect door gasket. DO NOT operate unless all doors are closed.

8.2.2 Exhaust damper open too far. Adjust static pressure, per Section 5.4.

8.2.3 Media may be too fine or worn out. Check condition of media.

8.2.4 Using friable media that rapidly breaks down. Check condition of media.

8.2.5 Blast pressure too high for the media, causing media to break down. Check blast pressure and adjust as needed.

8.2.6 Hole worn in reclaimer or leak in reclaimer seams. Check entire reclaimer for negative-pressure leaks.

8.3 Reduction in blast cleaning rate

8.3.1 Low media level reducing media flow. Check media level and replenish or replace as needed.

8.3.2 Media-air mixture out of adjustment. Adjust metering valve, per Section 5.3.

8.3.3 Reduced air pressure. This may be caused by the pressure regulator set too low, a malfunctioning regulator, a dirty filter element in the air filter, partially closed air valve, leaking air line, or other air tools in use. Inspect all items.

8.3.4 Blockage in media hose or gun. Blockage may occur because of:

- A damaged or missing reclaimer screen. Inspect screen.
- Heavy media flow. Adjust media flow, per Section 5.3.

8.3.5 Worn gun parts such as nozzle or air jet. Inspect and replace all worn parts.

8.3.6 Worn media hose. Check hose for leaks and soft spots. Replace if worn or damaged.

8.3.7 Air jet in gun out of adjustment. Check adjustment, per Section 5.2.

8.3.8 Moist media. Frequent bridging or blockage in the metering valve can be caused by moisture. Refer to Section 8.5.

8.4 Plugged nozzle

8.4.1 A damaged or missing reclaimer screen allows large particles to pass and block the nozzle. Replace or reinstall the screen, as necessary.

8.4.2 Media mixture too rich. Adjust media-air mixture, per Section 5.3.

8.5 Media bridging

8.5.1 Frequent bridging or blockage in the media metering valve can be caused by damp media. Media becomes damp from moisture in the compressed air, from absorption from ambient air, or from blasting parts that are slightly oily.

8.5.2 To avoid contaminating media from the workpiece, all parts put into the cabinet should be clean and dry. If parts are oily or greasy, degrease and dry them prior to blasting.

8.5.3 Moist compressed air may be due to a faulty compressor that overheats or pumps oil or moisture into the air line, too long of an air line permitting moisture to condense on the inside, or from high humidity. Drain the air filter and receiver tank regularly. Ongoing problems with moist air may require the installation of an air dryer or aftercooler in the air-supply line.

8.5.4 Absorption. Some media types tend to absorb moisture from the air, especially fine-mesh media in areas of high humidity. Empty the media and store it in an airtight container when the cabinet is not in use.

8.5.5 A vibrator mounted on the reclaimer mounting bolt may help prevent bridging of fine-mesh media. **NOTE: To avoid the possibility of compacting media, a vibrator should be set up to start when the foot pedal is pressed and to stop when the pedal is released.**

8.6 Media surge

8.6.1 Heavy media flow. Adjust media-air mixture, per Section 5.3.

8.7 Blockage in media hose

8.7.1 Media obstructions. Usually caused when the media mixture is too rich. Adjust media-air mixture, per Section 5.3.

8.7.2 Wet or damp media. See Section 8.5.

8.8 Poor suction in media hose

8.8.1 Inadequate air supply. Refer to Sections 1.11 and 2.2, to make sure cfm and air-hose requirements are met.

8.8.2 Air jet needs adjustment. Check adjustment, per Section 5.2.

8.8.3 Nozzle is worn. Replace the nozzle if the orifice diameter is worn 1/16" or more from the original size.

8.8.4 Blockage in media hose or nozzle. Refer to Sections 8.4 and 8.7.

8.8.5 Air jet and nozzle combination may be wrong. Refer to the cfm table in Paragraph 1.11.1, Figure 5.

8.8.6 Air jet sleeve extends past the end of the air jet. Cut the sleeve to align with the air jet.

8.8.7 Air jet worn. Inspect the end of the air jet and replace when wear reaches the orifice.

8.8.8 Blast pressure too high. Adjust pressure, per Section 5.1.

8.8.9 Nozzle inserted backward. The wider tapered end of the nozzle inserts into the gun toward the air jet, as shown in Section 7.3; Figure 33.

8.9 Air only (no media) from nozzle

8.9.1 Low media level in reclaimer. Check media level and replenish as needed.

8.9.2 Check for blockage in media hose. Refer to Section 8.7.

8.9.3 Poor suction in media hose. Refer to Section 8.8.

8.9.4 Make sure the air hose and media hose are not reversed on the BNP gun. The green air hose attaches to the back of the gun, and the clear media hose attaches to the bottom of the gun's grip. Refer to Page 43, Figure 55.

8.10 Blowback through media hose

8.10.1 Blockage in nozzle. Remove the nozzle and check for blockage.

8.10.2 Air jet may be too large for nozzle. Refer to the cfm table in Paragraph 1.11.1, Figure 5.

8.11 Blasting does not begin when the foot pedal is pressed.

8.11.1 Blast-pressure regulator may be set to low or to OFF. Adjust blast pressure, per Section 5.1.

8.11.2 Make sure the air compressor is operating and air-supply valves are open.

8.11.3 Check the nozzle to see if it is plugged. Refer to Section 8.4.

8.11.4 Cabinet door interlocks not engaging. Check adjustment, per Section 5.6. **NOTE: The green start-button light stays lit if either of the two door interlocks are not engaged.**

8.11.5 Dustbin interlock not engaging. Check adjustment, per Section 5.7. **NOTE: The green start-button light remains off when the dustbin interlock is not engaged.**

8.11.6 Blocked or leaking control lines. Check all urethane tubing for blockage or leaks.

8.11.7 Electrical malfunction. Refer to Section 9.3.

8.12 Blasting continues after releasing foot pedal

8.12.1 Foot pedal or another electrical malfunction. Check per Section 9.4.

8.12.2 Inlet regulator stuck open. Inspect inlet regulator.

8.13 Media buildup in cabinet hopper; media does not convey to reclaimer

NOTE: Do not pour media directly into the cabinet hopper, as overfilling may occur. Overfilling results in media carryover to the dust collector and possible blockage in the conveying hose.

8.13.1 Exhauster motor rotating backward. The motor should rotate as indicated by the arrow on the exhauster housing. If it does not rotate in the proper direction, **lockout** and **tagout** electrical power and switch the motor leads, as shown on the motor plate. Refer to the system's wiring schematic stowed in the electrical-control panel.

8.13.2 Dust-collector exhaust damper closed too far, restricting air movement through the cabinet. Adjust static pressure, per Section 5.4.

8.13.3 Dust-collector filter cartridge clogged. Refer to Section 5.8 to adjust pulse pressure; refer to Section 6.7 for additional cartridge pulsing.

8.13.4 Hole worn in flex hose between cabinet hopper and reclaimer inlet or between the reclaimer outlet and dust-collector inlet. Inspect hoses and replace them as needed.

8.13.5 Reclaimer door open. DO NOT operate unless door is closed.

8.13.6 Obstruction in flex hose. Remove hoses and check for blockage.

8.14 Static shocks

8.14.1 Cabinet and/or operator not grounded. Abrasive blasting generates static electricity. The cabinet must be earth-grounded to prevent static buildup. See Section 2.3. If shocks persist, the operator may be building up static. Attach a small ground wire, such as a wrist strap, from the operator to the cabinet.

8.14.2 Gloves wearing thin. Inspect gloves and replace them as needed.

8.14.3 Avoid holding parts and blasting off the grate. Static could build up in the part if it is not dissipated through the metal cabinet. If blasting parts off the grate cannot be avoided, attach a ground wire between the cabinet and the part.

8.15 Dust or media leaking from cabinet

⚠ ΩΑΡΝΙΝΓ

Shut down the cabinet and dust collector immediately if dust discharges from the cabinet or collector. Prolonged breathing of abrasive dust and blasting byproduct dust can result in serious lung disease or death. Short-term ingestion of toxic dust, such as lead, poses an immediate danger to health. Identify all materials to be removed by blasting and obtain a safety data sheet (SDS) for the blast media.

8.15.1 Refer to Section 8.13.

8.16 Dust leaking from dust collector

8.16.1 Cartridge not seasoned. Season cartridge, per Section 7.13.

8.16.2 Damaged or loose cartridge. Inspect filter cartridge and tighten the tensioning knob or replace the cartridge, as needed.

8.16.3 Faulty seal on the dust-collector door. Inspect seal and replace if damaged.

8.17 Dust collector does not pulse

NOTE: Unless noted otherwise, tests are performed with compressed air supplied to the pulse reservoir and power to the digital pulse timer.

8.17.1 Make sure the pulse reservoir is pressurized. Open the drain on the pulse reservoir. If air flows from the drain, proceed to Section 8.17.2. If air does not flow through the drain, proceed with Section 8.17.3.

8.17.2 Make sure the timer's LED display is lit, indicating power is reaching the timer.

- If the display is not lit, do the following:
  1. Make sure the power-supply switch (green pushbutton) is pressed ON (exhauster running). NOTE: The green light is lit as soon as power is applied to the cabinet, but the timer does not receive power unless the switch is pressed.
  2. Make sure the power cord is connected and that power is supplied to the outlet.
  3. If the display is not lit after checking the above, have the electrical system checked by a qualified electrician.
- Observe the LED display. If the display counts down OFF time to 0, the diaphragm pulse valve is malfunctioning. Inspect the pulse valve's diaphragm and O-ring for damage.

8.17.3 Check the pulse-pressure gauge:

- If the reading is low, adjust pulse pressure, per Section 5.8. If pressure does not increase after adjusting the regulator, check the compressed-air supply; look for a closed supply valve.
- If certain the air supply is open and at full pressure, and pressure does not increase in the pulse reservoir, the pressure regulator is faulty. Replace the pressure regulator.

8.18 Dust-collector pulse is steady stream of air instead of quick pulse

8.18.1 The pulse-valve diaphragm may be damaged. Continuous air flow into the dust collector typically means the diaphragm is leaking. Remove the four cap screws on the diaphragm pulse valve and inspect the diaphragm and O-ring. If damaged, replace them with a service kit listed in Section 10.11.

8.18.2 The pulse timer or valve may be stuck in the open position. Remove the muffler (Figure 58, Item 11) and listen for a stream of air escaping from the timer valve. If air continually bleeds from the valve, replace the timer assembly.

8.19 Dust-collector differential-pressure gauge is consistently high

8.19.1 Pulse valve may not be pulsing properly. Refer to Sections 8.17.

8.19.2 The in-line dust filter may be blocked. Clean or replace per Section 7.14.

8.19.3 Snubber fittings blocked with dust. Clean or replace, per Section 7.15.

8.19.4 The sequence OFF time may need adjusting. Refer to Section 5.9.2.

8.19.5 Filter cartridge may need to be replaced. Refer to Sections 5.8 and 7.12.

9.0 TROUBLESHOOTING – ELECTRICAL

Refer to Section 8.0 to troubleshoot pneumatic and mechanical problems

⚠ ΩΑΡΝΙΝΓ

Arc Flash and Shock Hazard.
Appropriate personal protection equipment (PPE) required prior to work on or near energized parts. Failure to comply can result in shocks, burns, injury, or death. All electrical work or any work done inside a control panel or junction box must be performed by a qualified electrician and comply with applicable codes.

Troubleshooting Notes:

A wiring schematic is stowed inside the main electrical control panel (CP1). Refer to the schematic for troubleshooting the electrical system.

Use a voltmeter capable of reading 120 VAC voltage and audible setting to checking resistance.

9.1 Green pushbutton light does not illuminate

9.1.1 Machine is not plugged into a 120 VAC receptacle or the receptacle does not have electricity.

9.1.1.1 Plug machine power cord into receptacle.

9.1.1.2 Check electrical receptacle for proper operation.

9.1.2 Fuse filament is broken.

9.1.2.1 Open the CP1 electrical panel door. CAUTION should be used when the panel is live.

9.1.2.2 Ensure main circuit breaker is not tripped or off.

9.1.2.3 Check 3A fuse FU1 to ensure it is not bad. Remove fuse and use voltmeter on the resistance setting and the audible ringing sound enabled, use the voltmeter to “ring” across the fuse to ensure the inside filament is not broken. Reinstall the fuse if the voltmeter rings.

9.1.2.4 Change the voltmeter to AC setting, and then measure voltage from Wire 13 on fuse block FU1 to Terminal 2. 120 VAC should be present.

9.1.3 Dust-collector dustbin is not installed correctly.

9.1.3.1 Install the dustbin under the dust collector and securely clamp it in place using the provided clamps.

9.1.4 Dust-collector dustbin switch is bad.

9.1.4.1 With the dust-collector bin locked in place correctly, check voltage between Terminals 10 and 2. If 120 VAC is not present, dust-collector bin switch has an issue. Check wiring and mechanical engagement, per Section 5.7.

9.1.5 Green pushbutton light is faulty.

9.1.5.1 Replace either the LED light inside the green pushbutton or the entire pushbutton light assembly.

9.2 Dust-collector exhauster motor does not start when pressing the illuminated green (START) pushbutton

9.2.1 Circuit breaker is tripped.

9.2.1.1 Ensure main circuit breaker is not tripped or off. If circuit breaker will not reset, it may need to be replaced.

9.2.2 Green start pushbutton faulty.

9.2.2.1 With green start pushbutton pressed, check voltage between Terminals 12 and 2. If 120 VAC is not present, green start pushbutton has an issue. Check wiring and pushbutton.

9.2.3 Red stop pushbutton faulty.

9.2.3.1 With green start pushbutton pressed, check voltage between Terminals 11 and 2. 120 VAC should <u>not</u> be present. Then, with the red pushbutton pressed, check voltage between Terminals 11 and 2. 120 VAC should be present. If either case is not true, then the red stop pushbutton has an issue. Check wiring and pushbutton.

9.2.4 Motor contactor is faulty

9.2.4.1 With the green start pushbutton pressed and the red stop pushbutton not pressed, check voltage between Terminals 12 and 2. 120 VAC should be present and motor contactor should be pulled in. If motor contactor is <u>not</u> pulled in, check for faulty contactor.

9.2.4.2 With the green start pushbutton pressed and red stop pushbutton not pressed, use voltmeter to “ring” across the motor contactor Terminals 13 and 14. It should ring out. If it does not ring out, check for faulty contactor.

9.2.4.3 If motor contactor engages after pressing the green start pushbutton, but the motor does not start, use voltmeter to “ring” across Terminals 1 and 2, then 3 and 4, and then 5 and 6. If any of these three pairs do not ring out, motor contactor may be faulty. If they all ring out, make sure motor wiring is correct and motor is not bad.

9.2.5 Motor wired incorrectly

9.2.5.1 Remove cover plate on motor junction box (located directly on the motor housing). Check that the wiring is correct to the little wiring diagram (usually located directly on the motor housing, on the motor junction box cover plate, or inside underneath the motor junction cover plate.

9.2.5.2 Replace the motor.

9.3 Blasting does not begin when foot pedal is pressed.

9.3.1 Door interlocks not engaged

9.3.1.1 Cabinet door interlocks not engaging. Check adjustment, per Section 5.6.

9.3.1.2 With dust-collector motor on and running, check left-hand door interlock switch. Use voltmeter to check that 120 VAC is present across Terminals 8 and 2 with the door closed, and that 120 VAC is not present with the door open. If 120 VAC is not present with the door closed, the switch has an issue. Check wiring and switch.

9.3.1.3 With dust collector motor on and running and the left-hand door closed, check right-hand door interlock switch. Use voltmeter to check that 120 VAC is present across Terminals 6 and 2 with the door closed, and that 120 VAC is not present with the door open. If 120 VAC is not present with door closed, the switch has an issue. Check wiring and switch.

9.4 Foot pedal not working

9.4.1 With dust-collector motor on and running, press foot pedal. Use voltmeter to check that 120 VAC is present across Terminals 5 and 2 with the door closed, and 120 VAC is not present with the foot pedal not pressed. If 120 VAC is not present with the pedal pressed, the pedal has an issue. Check wiring and pedal.

9.5 Blast solenoid-valve not working

9.5.1 With the dust collector on, both doors closed, and the foot pedal pressed, voltage should be on Terminals 5 and 2 and with the blast solenoid valve should actuate ON. Using a metal screwdriver, place the stem on top of the valve where the screw is located that attaches the cable to the valve, a light magnetic feel should result as the screwdriver is slowly pull up and away from the cable screw. If not, the valve may be faulty.

9.5.2 Press the manual valve button on the valve body to see if it allows air to pass. If air passes, check electrical wiring and check if the valve may be faulty. If no air passes, check air supply and check if the valve may be faulty.

9.6 Poor visibility/dusty media

9.6.1 Auto pulse valve not working

9.6.1.1 With dust-collector motor on and running, check voltage between Terminals 9 and 2. If 120 VAC is present, then the auto-pulse timer should be powered and operating normally. If not, check wiring and that the timer is not faulty.

9.6.2 Exhauster motor does not start

9.6.2.1 Refer to Section 8.1.

9.7 Cabinet LED light does not turn ON

9.7.1 With dust-collector motor on and running, check voltage between Terminals 11 and 2. If 120 VAC is present, then the blast cabinet light should be on. If not, check wiring and that the fixture is not faulty.

10.0 ACCESSORIES and REPLACEMENT PARTS

Unless otherwise noted quantities are each.

10.1 Optional Accessories

Turntables

⚠ ΩΑΡΝΙΝΓ

Turntable capacities are based on concentric loading. Use solid fixturing to hold heavy parts in place. Do not remove lift equipment until the part is adequately supported to prevent movement. Moving or rotating heavy, unsupported, or off-centered parts may cause them to shift or topple, and cause severe injury.

Fixed-Base Turntable Without Bearing

Description	Stock No.
20" diameter, 25 lb capacity	12412

Track and Low-Profile Table, 17.5″ x 18.5″, 500 lb Capacity – Figure 47

Item	Description	Stock No.
(-)	Table and Track Assembly	24841
1.	Roller, track	25023
2.	Washer, 5/8 flat (each, seven per roller) six for spacers, one with jam nut	03715
3.	Nut, 5/8-NF jam	03712

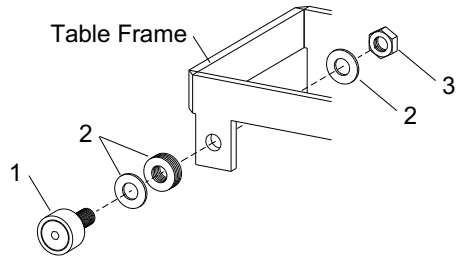

Figure 47

Aluminum oxide kit, factory installed, includes: #5 boron carbide nozzle, black-rubber cabinet curtains with grommets and curtain hardware. 12954

Rubber curtains, black for 55-S cabinet
- Curtain set 23530
- Back Curtain 14318
- Front curtain 14319
- Door curtain, 2 required 14320

Rubber curtains, white curtain set 23540

Boron carbide nozzle
- No. 5 11935
- No. 6 11936

Wide-spray nozzle
- Tungsten carbide, No. 6 11947
- Boron carbide, No. 6 11934

NOTE: Wide-spray nozzles require the following accessories:
- Nozzle nut, wide-spray 11916
- Retaining ring, wide-spray 12038
- Nozzle guard, wide-spray 12295

HEPA filter assembly, Pulsar Plus III top mount 30485
Manometer kit, flexible U-tube) 12528
Time delay door locks, for both doors 30873
Lock pins (pkg of 25) for twist-on hose couplings 11203
Safety cable, for 1/2" to 1-1/4" OD hose 15012
Anti-fatigue floor-mat, 2 ft x 3 ft for front of cab. 24744
Window cover lens, pack of 5 06190
Differential-pressure gauge assembly for measuring reclaimer static pressure 23355

Optional Extension Nozzles – Figure 48

Item	Description	Stock No.
1.	3" Straight extension nozzle	
	No. 5, 5/16" orifice	11921
	No. 6, 3/8" orifice	11922
2.	6" Straight extension nozzle	
	No. 5, 5/16" orifice	11927
	No. 6, 3/8" orifice	11928
3.	9" Straight extension nozzle	
	No. 5, 5/16" orifice	11924
	No. 6, 3/8" orifice	11925
4.	Side-angle extension nozzle assemblies with No. 5 orifice, includes 5, 6, 7, and 8	
	4″ long assembly	21311
	6" long assembly	12374
	9" long assembly	12373
5.	Casing, side-angle extension nozzle	
	4″ long casing	11943
	6" long casing	11940
	9" long casing	11939
6.	Tip, side-angle extension	12173
7.	Snap ring, side-angle extension	12040
8.	O-ring, side-angle extension	08977

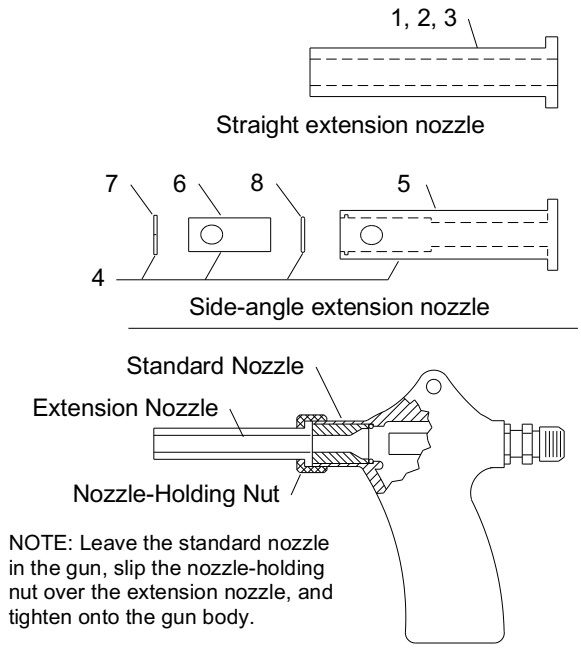

Figure 48

10.2 Pulsar Plus 55-S Cabinet Assembly Figure 49

Item	Description	Stock No.
1.	Gasket, 5/16" x 1", adhesive-backed, per foot, specify feet required	
	Door, 8 ft per door	00187
	Air-inlet damper, 3 ft required	00187
2.*	Door assembly, left	30592
3.*	Door assembly, right	30593
4.	Grate for 55	11813
5.	Latch kit, door	20064
6.	Hose, 4" ID light-lined flex per foot, 7 ft required	12466
7.	Clamp, for 4" hose	11577
8.	Foot pedal, electric, less cable and strain relief	30188
9.	Grommet, media-air hose, 3/4" ID	11798
10.	Adaptor pipe, universal, for 4" flex hose	23295
11.	Gasket, 4" adaptor pipe	23258
12.	Bracket, door interlock actuator	19152
13.	Detent sleeve, door interlock	15042
14.	Switch, door interlock	30299
15.	Cover, interlock switch	30201
16.	Shelf, adjustable foot	27599
17.	Pin, 1/2" X 2" quick release, each	24838
18.	Bracket, foot-shelf mounting, each	27600
19.	Gasket, 5/32" x 3/4", 3 ft required	00192
20.	Gasket, hopper hose plate	20247
21.	Plate, hopper hose	21656
22.	Damper, air-inlet	23156
23.	Grommet, 5/16" ID rubber	30447
24.	Cabinet control-console assembly, refer to Section 10.3 for parts	30359
25.	LED light assembly, refer to Section 10.7 for parts	29711

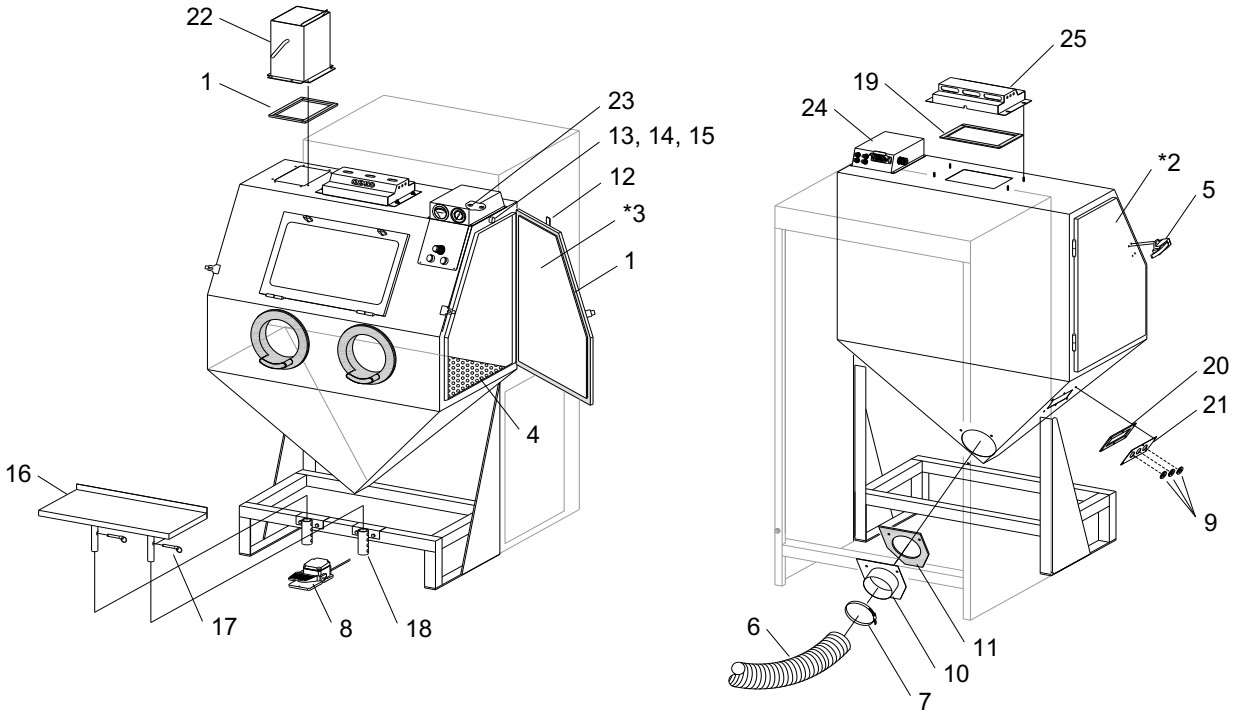

* Door assemblies include door gasket but does not include the latch.

Figure 49

10.3 Cabinet Control Console Assembly – Figure 50

Item	Description	Stock No.
(-)	Control console assembly, includes all items except 19, which are on the cabinet	30359
1.	Gauge, pressure, 1/4-NPT cbm	30212
2.	Gauge, differential pressure	30213
3.	Regulator, 1/8" NPT pilot pressure	30298
4.	Strain relief, 1/2" w/locknut	30398
5.	Connector, 1/4 push lock tube bulkhead	30320
6.	Tubing, 1/4" OD blue and gray twin specify feet required	30315
7.	Tubing, 1/4" OD green and white twin specify feet required	30316
8.	Fitting, push lock el, 1/8" x 1/4" tube	30371
9.	Adaptor, push lock el, 1/4" x 1/4" tube	30373
10.	Reducing union, 1/4" x 5/16" tubing	30372
11.	Panel nut, pressure regulator mount	30374
12.	Switch, green LED pushbutton	30291
13.	Switch, red pushbutton	30292
14.	Washer, color code	
	White, differential pressure IN (–)	30417
	Blue, air IN	30418
	Green, differential pressure OUT (+)	30419
	Gray, air OUT	30420
15.	Tubing, 5/16" OD black specify feet required	20856
16.	Switch, door interlock	30299
17.	Cover, interlock switch	30201
18.	Tubing 1/8"(1/4" OD) urethane, 1 ft. req'd.	12475
19.	Grommet, 5/16" ID rubber	30447

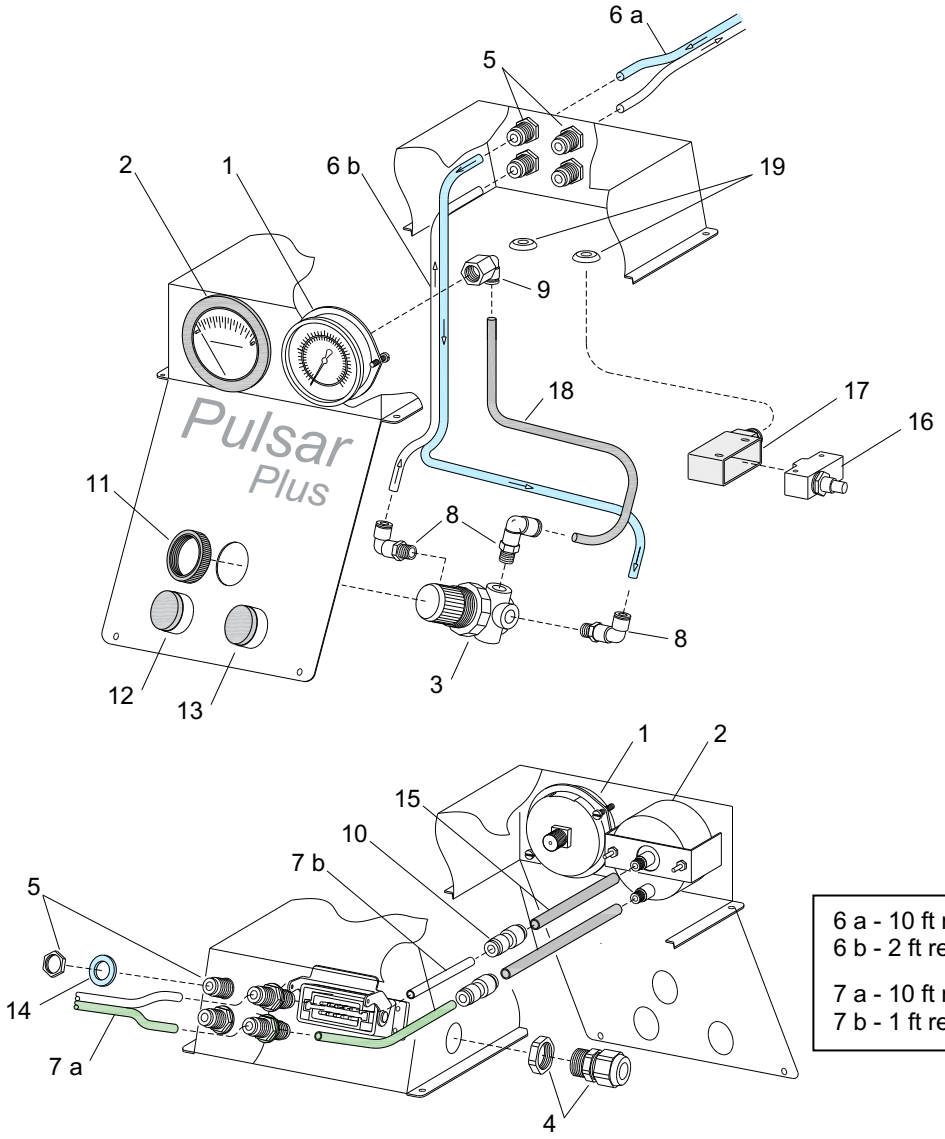

6 a - 10 ft required at this location.
6 b - 2 ft required at this location.

7 a - 10 ft required at this location.
7 b - 1 ft required at this location.

Figure 50

10.4 View-Window Assembly – Figure 51

Item	Description	Stock No.
1.	Window glass, 12.5" x 19.5" laminated	12212
2.	Gasket, 5/16" x 3/4", applied to cabinet per foot, 6-feet required	00189
3.	Gasket, 5/32" x 3/4", applied to window frame, per foot, 6-feet required	00192
4.	Cover lens, pkg. of 5	06190
5.	Nut, plastic, window frame, 2 required	23035
6.	Window frame, quick-change	22826

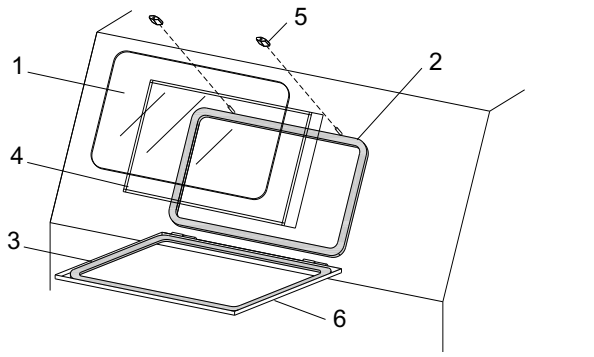

Figure 51

10.5 Metering Valve – Figure 52

Item	Description	Stock No.
(-)	Metering valve assembly, BNP	12417
1.	Metering stem assembly, items 1, 2, & 3	23889
2.	Stem, metering adjusting	23097
3.	Screw, adjusting	23098
4.	Nut, adjusting stem lock	23099
5.	Body, metering valve	11532
6.	Fitting, hose, 3/8" NPT x 1/2" barb	06369
7.	Plug, metering valve	12011

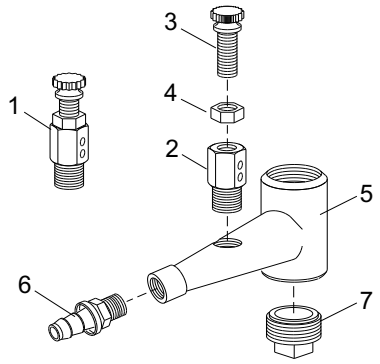

Figure 52

10.6 Gloves and Glove Mounts – Figure 53

Item	Description	Stock No.
(A)	Armrest-glove mount kit, each, includes items 1 thru 5, 10, and 11	30192
(B)	Mounting ring kit, glove mount includes items 2 thru 5, 10, and 11	30499
(C)	Glove and armrest-mount kit, right hand includes items 1, 8 (standard), and 9	30580
(D)	Glove and armrest-mount kit, left hand, includes items 1, 7 (standard), and 9	30581
1.	Armrest–glove mount	30193
2.	Ring, glove mount attachment	30194
3.	O-ring, glove mount seal, 10-3/8" OD nom	30396
4.	Screw, 1/4" x 10-24 shoulder, 3 required	30195
5.	Nut, 10-24 hex, 3 required	12760
6.	Glove set	
	Standard size	11215
	Small size	29553
7.	Glove, left hand only	
	Standard size	12710
	Small size	29551
8.	Glove, right hand only	
	Standard size	12711
	Small size	29552
9.	Strap, hook and loop glove mount, ea.	30397
10.	Screw, 10-32 x 1/2" Truss Hd, 3 required	12062
11.	Nut, 10-32 lock, 3 required	12731

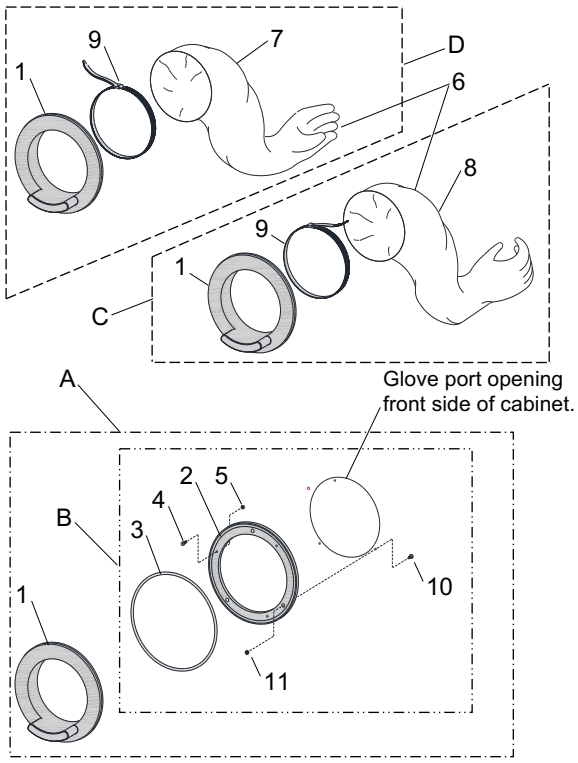

Figure 53

10.7 LED Light Assembly – Figure 54

Item	Description	Stock No.
1.	LED light assembly	29711
2.	Diffuser lens	29713
3.	Gasket, 5/32" x 3/4", 3 ft required	00192
4.	Strain-relief connector, 1/2"	11631
5.	Nut, 1/2" conduit	12713
6.	Nut, 1/4-20 hex	03111
7.	Washer, 1/4 lock	03117
8.	Washer, 1/4 flat	03116

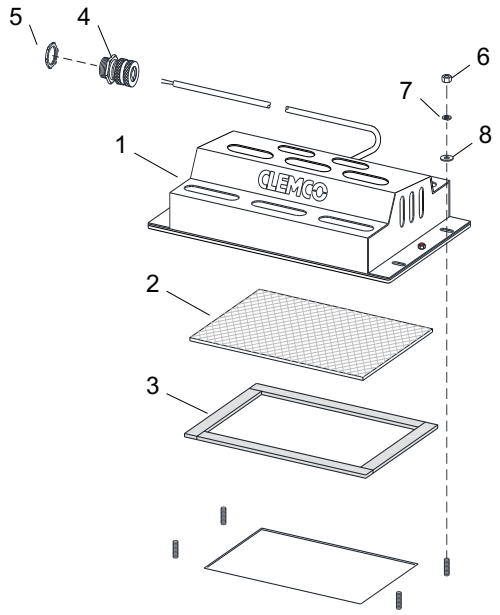

Figure 54

10.8 BNP® Gun and Feed Assembly – Figure 55

Item	Description	Stock No.
(-)	BNP Gun assemblies less nozzle, includes items 1 (brass) through 7	
	No. 4 Gun	12301
	No. 5 Gun	12302
	No. 6 Gun	12303
1.	Nut, nozzle holding	
	Standard, knurled brass	11914
	Urethane covered,	11574
2.	O-ring	08975
3.	Gun body	11802
4.	Lock nut, air jet	11913
5.	Elastic jet-sleeve	12097
6.	Air jet assembly w/ Item 5	
	No. 4	12342
	No. 5	12343
	No. 6	12344
7.	Fitting, hose, 3/8" NPT x 1/2" barb	06369
8.	Hose end, 1/2" barb x 1/2" fem. swivel	15002
9.	Nozzle, ceramic	
	No. 5, green tip	11930
	No. 6, blue tip	11931
	Nozzle, boron carbide	
	No. 5	11935
	No. 6	11936
	Nozzle, tungsten carbide	
	No. 5	13118
10.	Hose, 1/2" air, 10 ft required	12472
11.	Hose, media, clear, 10 ft required	12476
12.	Wide-spray nozzle	
	Tungsten carbide, No. 6	11947
	Boron carbide	
	No. 6	11934
13.	Wide-spray nozzle nut	
	Knurled brass	11916
	Urethane covered	12906
14.	Wide-spray retaining ring	12038
15.	Wide-spray nozzle guard	12295
16.	Adjusting tool, correctly positions air jet	19041

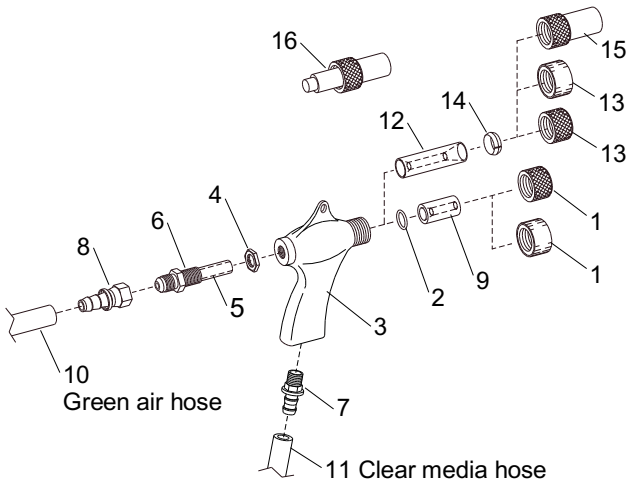

Figure 55

10.9 Pneumatic Controls and Parts – Figure 56

Item		Description	Stock No.
1.	*	Regulator, 1/4" pressure with gauge	30333
2.	*	Fitting, elbow, 1/4-NPT x 3/8" tube	11685
3.		Elbow, 1/4" brass st.	02027
4.		Nipple, 1/4" brass hex	02808
5.	*	Filter, 1/2" manual-drain with O-rings	30326
6.	*	Muffler, 1/4" bronze	03988
7.	*	Tee, 3/8-NPT brass male x f-f	30334
8.		Tubing, 3/8" OD poly, specify ft required	12478
9.	*	Bracket, suction controls mounting (each)	30327
10.	*	Solenoid, 1/4-NPT 3-way	30330
11.	*	Coil, 3-way solenoid	30331
12.		Filter, inline dust, 1/4" tube	23415
13.		Tubing, 1/4" OD blue and gray twin specify feet required	30315
14.		Tubing, 1/4" OD green and white twin specify feet required	30316
15.	*	Regulator, 1/2" BSPT pilot-op w/O-rings	30329
16.	*	Fitting, 1/2" BSPT x 1/2" JIC	30323
17.		Hose end, 1/2" barb x 1/2" female swivel	15002
18.		Hose end, 1/2" barb x 3/8" male NPT	06369
19.		Blow-off nozzle	13116
20.		Air hose, 1/2" ID, specify feet required	12472
21.		Gun assembly, BNP No. 5 (standard) Refer to Section 10.8 for other sizes	12302
22.		Hose, media, 1/2" ID clear urethane, specify feet required, 10 ft standard	12476
23.		Metering valve assembly	12417
24.	*	Fitting, str. 3/8" male NPT x 3/8" tube	30439
25.	*	Fitting, str. 3/8" male NPT x 1/4" tube	30438
26.	*	Fitting, elbow, 1/4" male NPT x 1/4" tube	30336
27.	*	Nipple, 1/8" BSPP x 1/4 NPT brass hex	30324
28.	*	Fitting, Elbow, 1/2" male JIC x 1/2 NPT	30337
29	*	Bushing, 1/2 NPT x 3/8 NPT brass	30335
30.		Bushing, 1/4 NPT x 1/8 NPT brass	02010
31.	*	Branch (manifold) module w/O-rings	30328
32.		Fitting, snubber el, 1/8 NPT x 1/4" tube	30455
33.		Pneumatic inlet pkg, includes items w/*	30204
34.		Filter element, 5 micron 1/2" filter	30824
35.		Filter bowl with O-ring and man. drain	30825

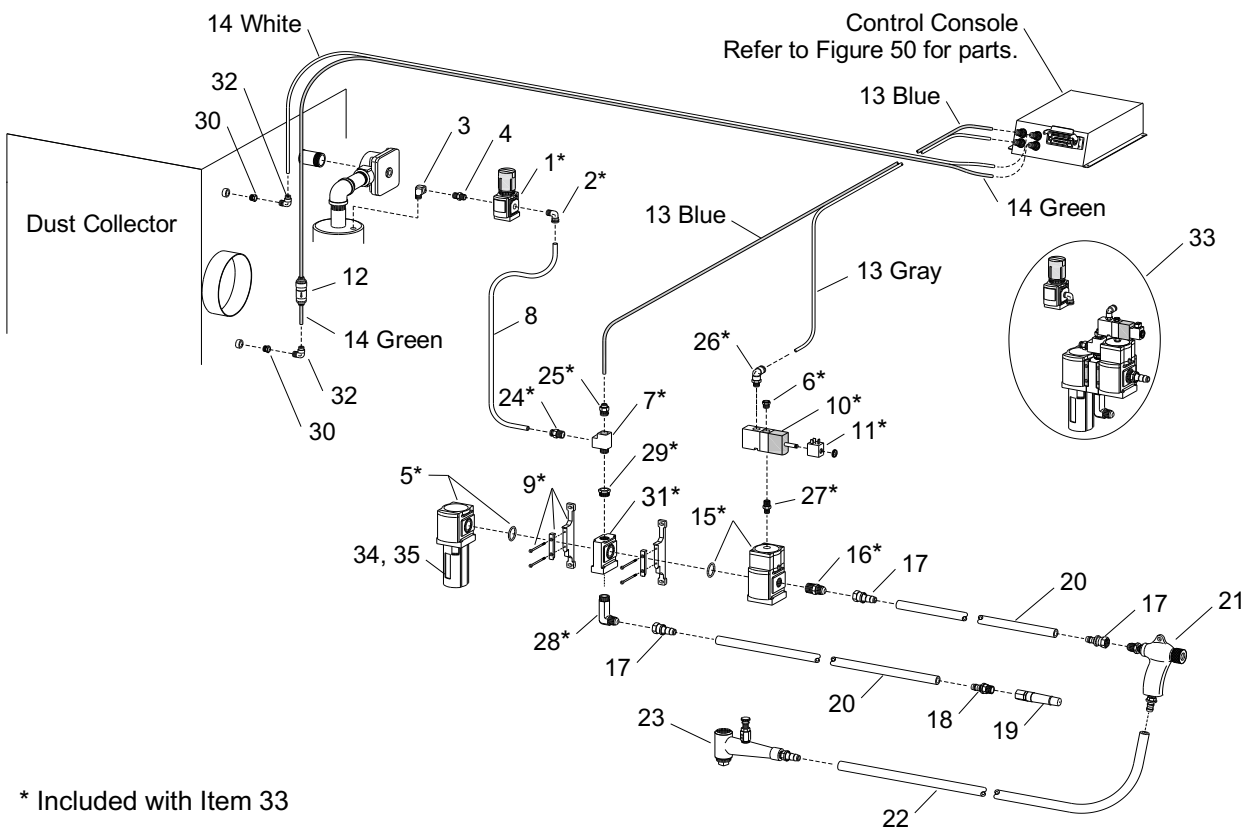

Figure 56

10.10 Reclaimer, 300 CFM – Figure 57

Item	Description	Stock No.
(-)	Reclaimer assembly, Pulsar Plus 300 cfm Includes items with an asterisk (*)	30461
1.*	Inlet-pipe adaptor, 4"	30180
2.*	Gasket, 4" inlet pipe adaptor	11746
3.	Gasket, door, 5/16" x 1/2," 3 ft required	30449
4.*	Debris screen, 8-mesh	21265
5.	Liner, reclaimer door	30448
6.*	Clamp assembly, reclaimer door	30189
7.*	Metering valve	12417
8.*	Door assembly, reclaimer, includes items 3, 5, and hinge	30459
9.*	Wear plate w/mounting screws	14060
10.*	Clamp, 6" hose	00750
11.*	Hose, 6" unlined flex, 4 ft required	12452
12.	Clamp, 4" hose	11577
13.	Hose, 4" light-lined flex, 7 ft required	12466

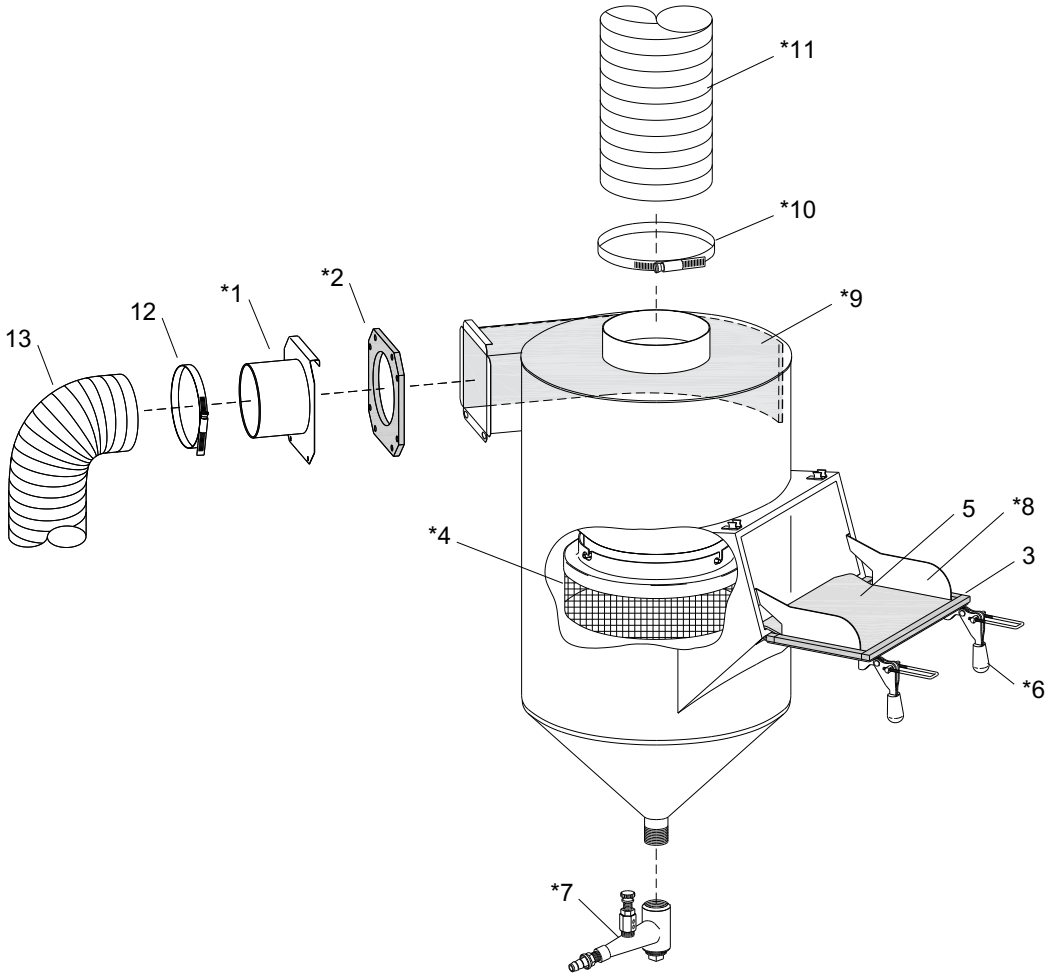

Figure 57

10.11 Dust Collector Assembly, 300 cfm Figure 58

Item	Description	Stock No.
1.	Motor, exhauster 1 hp, 1-ph	12314
2.	Motor plate, 300 cfm	20229
3.	Paddle wheel, 300 cfm	19232
4.	Gasket, 5/16" x 1", adhesive-backed, Motor plate, 4 ft required	00187
5.	Gasket, 5/8" x 1-1/4", adhesive-backed, dust collector door, 8 ft required	27464
6.	Valve, 1" diaphragm pulse	30168
7.	Petcock	01993
8.	Filter cartridge, 300cfm, 9"x26" flanged	33109
9.	Timer, digital pulse	30161
10.	Regulator, 1/4" pressure with gauge	30333
11.	Muffler, 1/4"-NPT bronze	03988
12.	Tubing, 3/8" OD poly, specify ft required	12478
13.	Fitting, elbow, 1/4" NPT x 3/8" tube	11685
14.	Elbow, 1/4" brass st.	02027
15.	Nipple, 1/4" brass hex	02808
16.	Gasket exhaust damper, 300 cfm	30198
17.	Latch, U-Hook	31692
18.	Knob, dust door retainer	30191
19.	Clamp, 6" hose	00750
20	Hose, 6" unlined flex, 4 ft. required	12452
21.	Switch, interlock limit	30299
22.	Cover, interlock switch	30201
23.	Filter, inline, 1/4" tube	23415
24.	Bushing, 1/4 NPT x 1/8 NPT brass	02010
25.	Fitting, snubber el, 1/8 NPT x 1/4" tube	30455
26.	Tubing, 1/4" OD green and white twin specify feet required	30316
27.	Dustbin assy, includes wheels & gasket	30185
28.	Lug, grounding	11639
29.	Dustbin Gasket	31542
30.	Wheel kit, 4" rubber Includes four wheels and hardware	30456
31.	Service kit, diaphragm pulse valve	30173
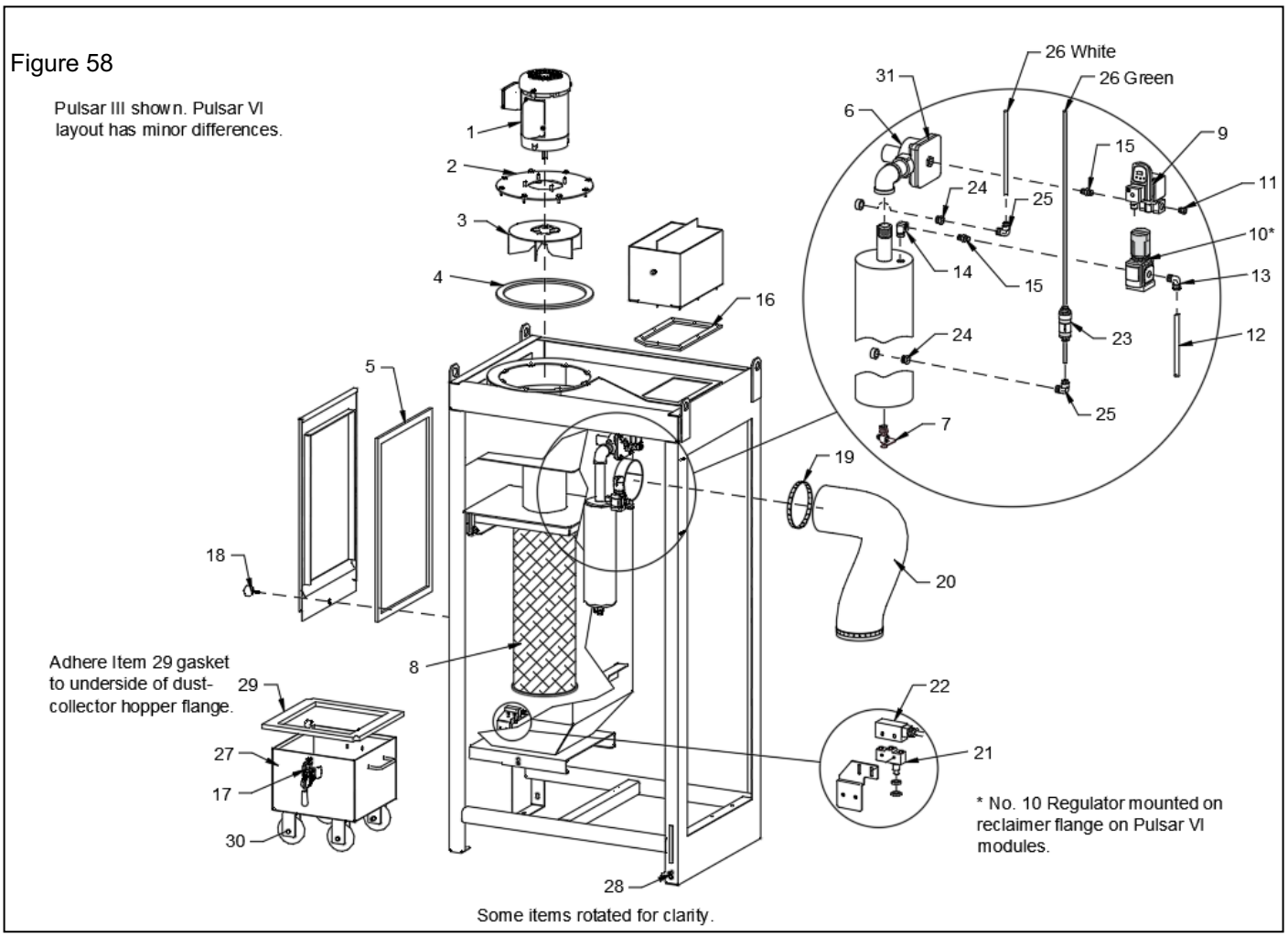
Figure 58