OPERATION MANUAL

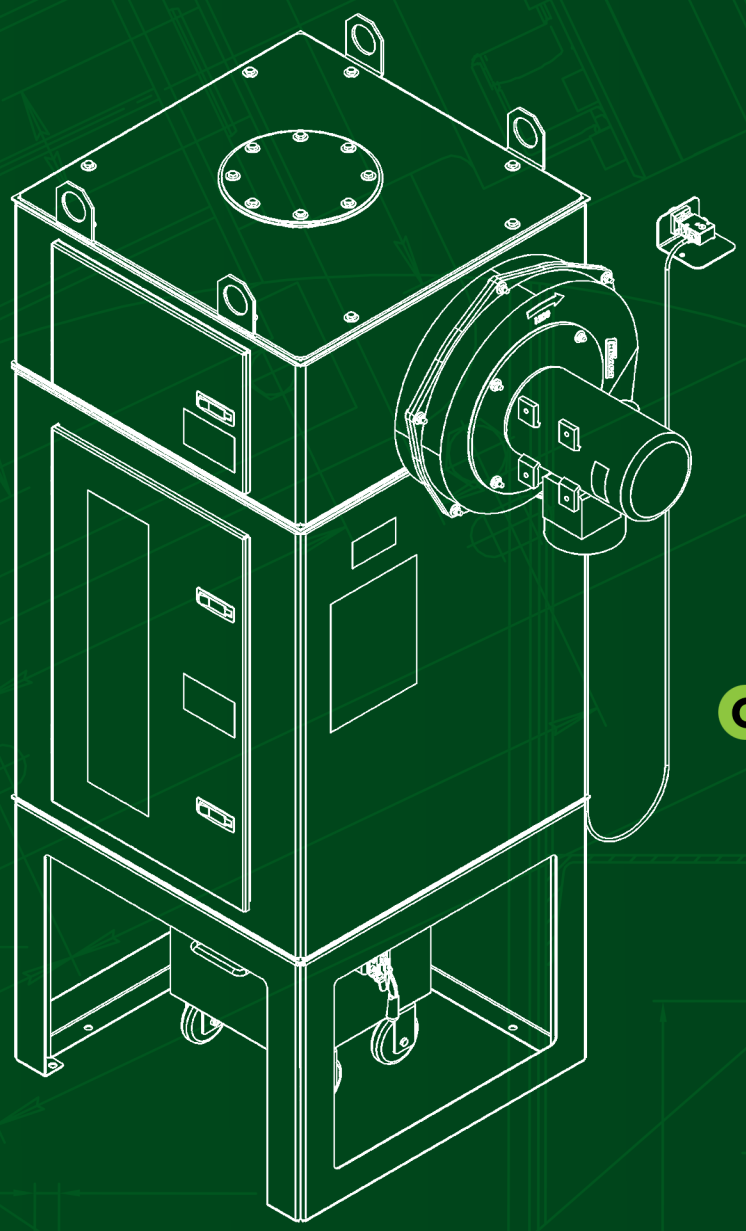

OM 32011

clemco

LPDC Reverse Pulse Dust Collectors
Models 300 / 600 / 900 cfm

Date of Issue: 03/25

NOTICE

Notice to purchasers and users of our products and this informational material

Clemco proudly provides products for the abrasive blast industry and is confident that industry professionals will use their knowledge and expertise for the safe and efficient use of these products.

The products described in this material and the information relating to these products are intended for knowledgeable, experienced users. It is the responsibility of the user to insure that proper training of operators has been performed and a safe work environment is provided.

No representation is intended or made as to: the suitability of the products described here for any purpose or application, or to the efficiency, production rate, or useful life of these products. All estimates regarding production rates or finishes are the responsibility of the user and must be derived solely from the user's experience and expertise, not from information contained in this material.

It is possible that the products described in this material may be combined with other products by the user for purposes determined solely by the user. No representations are intended or made as to the suitability of, or engineering balance of, or compliance with regulations or standard practice of any such combination of products or components the user may employ.

This equipment is only one component of a cabinet blasting operation. Other products, such as air compressors, air filters and receivers, abrasives, equipment for ventilating, dehumidifying, or other equipment, even if offered by Clemco, may have been manufactured or supplied by others. The information Clemco provides is intended to support the products Clemco manufactures. Users must contact each manufacturer and supplier of products used in the blast operation for warnings, information, training, and instruction relating to the proper and safe use of their equipment.

clemco

©2025 Clemco Industries Corp.
One Cablecar Drive • Washington MO 63090
Phone: 636.239.4300
info@clemcoindustries.com • www.clemcoindustries.com
ALL RIGHTS RESERVED

Table of Contents

1.0 Introduction ..... page 4
General Description 1.1
Theory of Operation 1.2

2.0 Setup and Installation ..... page 4
Setup 2.1
Positioning Dust Collector 2.2
Flex Hose Connections 2.3
Ground Dust Collector 2.4
Connect Compressed-Air Supply 2.5
Electrical Service 2.6
Check Motor Rotation 2.7
Install Filter Cartridge 2.8

3.0 Operation ..... page 10
Initial Startup 3.1
Operational Startup 3.2
Pulsing (Cleaning) Dust Collector Cartridge 3.3
Shutdown 3.4

4.0 Field Installed Options ..... page 12
Floor Standing HEPA Filter 4.1
Differential-Pressure Gauge Kit 4.2
Foot-Pedal Pulse Kit 4.3
Auto-Pulse Kit 4.4

5.0 Adjustments ..... page 15
Pulse Pressure 5.1

6.0 Daily Preventative Maintenance ..... page 16
Inspect and Empty Dust Container 6.1
Check Exhaust Air for Dust 6.2
Cartridge Pulsing 6.3

7.0 Service Maintenance ..... page 17
Replacing Filter Cartridge 7.1
Seasoning Cartridge 7.2

8.0 Troubleshooting ..... page 18
Collector Not Pulsing 8.1
Pulse is Steady Stream of Air Instead of Quick Pulse 8.2
Exhauster Not Running 8.3
Dust Discharges from Exhauster 8.4

9.0 Replacement Parts ..... page 20
Replacement Dust Collectors 9.1
Field-Installed Accessories 9.2
Exhauster Assembly 9.3
Inlet, Filter, and Trash Bin Assembly 9.4
Fan and Plumbing Assembly 9.5
Pulse Plumbing Assembly 9.6

Safety Alerts Key

This is the safety alert symbol. It is used to alert you to potential physical injury hazards. Obey all safety messages that follow this symbol to avoid possible injury or death.

NOTICE

Notice indicates information that is considered important, but not hazard-related, if not avoided, could result in property damage.

CAUTION

Caution indicates a hazardous situation that, if not avoided, could result in minor or moderate injury.

WARNING

DANGER

Warning and Danger, indicates a hazardous situation that, if not avoided, will result in death or serious injury.

1.0 Introduction

1.0.1 | This manual covers the installation, operation, and maintenance of all models of the LPDC Reverse-Pulse Dust Collector. The dust collector is used with blast cabinets, reclaimers, and small recovery systems. These instructions also contain important information required for safe operation of the collector. Before operating the dust collector and other equipment used with the collector, all personnel involved with the operation must read this entire manual. Refer to the appropriate manual for operation of equipment used in conjunction with the dust collector.

1.1 General Description

1.1.1 | LPDC dust collectors are dry, reverse-pulse single-cartridge collectors, primarily used to ventilate abrasive blast cabinets and remove dust from exhausting air. Industrial models (same as cabinet models but provided with longer inlet hose) are used with sweep-in pneumatic recovery systems, also provides the air-wash for AWAC abrasive cleaners. LPDC dust collectors are available in three sizes:

- 300 cfm with 5" inlet - used with a small-to-medium-size cabinet with a 300 cfm reclaimer.
- 600 cfm with 6" inlet - used with a cabinet utilizing a 600 cfm reclaimer and with the AWAC abrasive cleaner.
- 900 cfm with 7" inlet - used with a cabinet or sweep-in pneumatic recovery system utilizing a 900 cfm reclaimer.

Figure 1 shows call outs of the dust collector components. Figure 2 shows typical arrangements when collector is used to ventilate a blast cabinet, and Figure 3 shows the connection to an abrasive cleaner.

1.2 Theory of Operation

1.2.1 | The exhauster is mounted on the clean-air side of the filter cartridge, and provides "pull-thru" (pulls air through the filter cartridge) air flow, rated at 300, 600, or 900 cfm depending on the dust collector model. The exhauster draws dust-laden air through a flexible duct hose from the reclaimer into the lower side of the collector and through the filter cartridge. As air passes through the cartridge, dust accumulates on the outer surface. Cleaned air flows up through the center of the cartridge and out the exhauster.

1.2.2 | Accumulated dust is released from the cartridge when a periodic pulse of high-velocity compressed air expands against the inner surface of the cartridge. The pulse occurs each time the operator presses the manually controlled pulse valve. The dust particles fall away from the cartridge into the dust container for disposal.

⚠ NOTICE

Do not pulse new dust collectors or replacement cartridge until the cartridge is properly seasoned per Section 7.2. Pulsing unseasoned cartridges can cause premature cartridge failure and decrease efficiency of the dust collector.

2.0 Setup and Installation

2.0.1 | Select a location where compressed air and electrical service are available. The location must comply with OSHA and local safety codes. Refer to the following table for the collector height.

Model	Side Fan	Top Fan
300 cfm	78"	96"
600 cfm	78"	96"
300 cfm	78"	96"

2.0.2 | Refer to Figure 2 and place the collector so the inlet flex hose has as few bends as possible. Determine the best location and position of all units before making the final assembly. Doing so will insure there are no placement issues during maintenance.

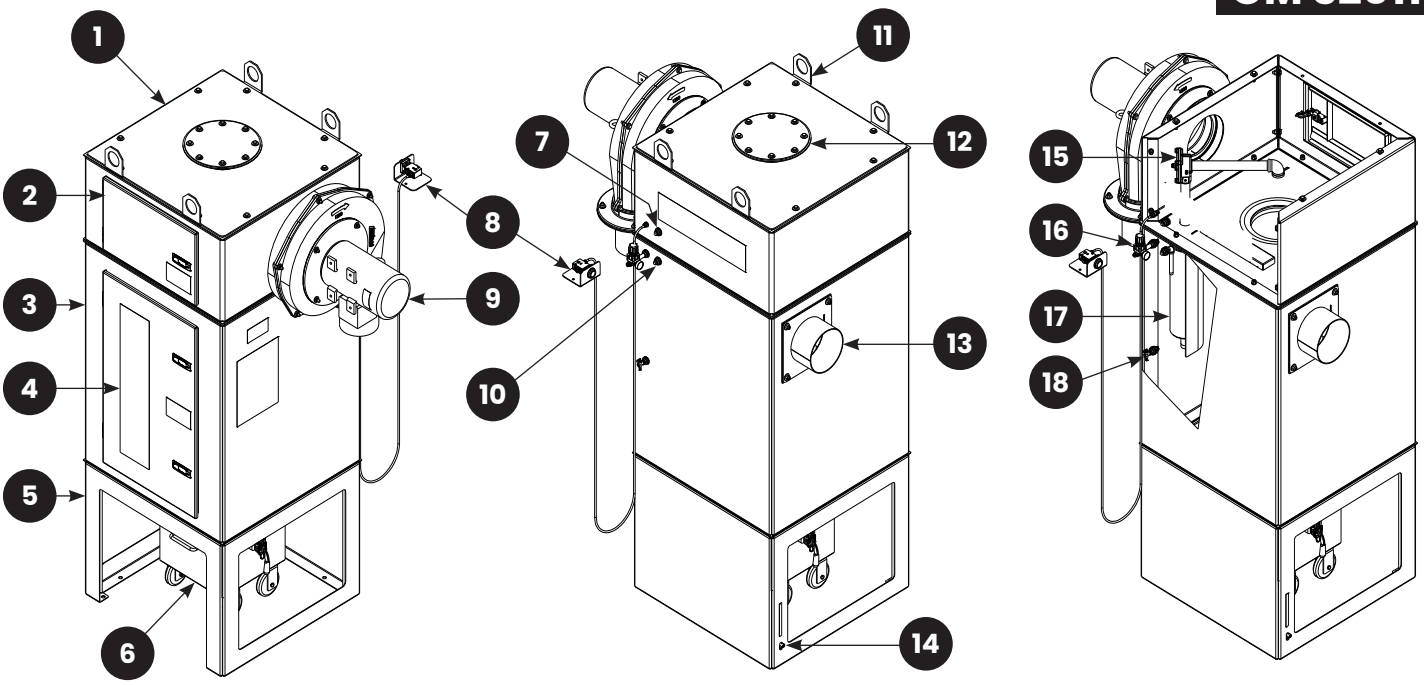

FIGURE 1: (1) Clean Air Box; (2) Maintenance Access Door; (3) DC Body; (4) Filter Access Door; (5) DC Base; (6) Dust Bin; (7) Clean Side Diff. Pressure Port; (8) Remote Mount Pulse Button; (9) Exhauster; (10) Dirty Side Diff. Pressure Port; (11) Lifting Eyes; (12) Exhauster Cover Plate; (13) Inlet Pipe; (14) Grounding Lug; (15) Pulse Valve Diaphragm; (16) Pulse Regulator; (17) Pulse Reservoir; (18) Drain Valve

2.1 Setup

2.1.1 | The dust collector is shipped standing up. Place the skid close to the collector's final position and remove all shipping restraints.

⚠ WARNING

Weight of an assembled dust collector varies slightly among models. A 900 cfm dust collector weighs approximately 500 lbs. Up-righting the collector and moving it into position should be performed by experienced personnel who are familiar with safety hazards associated with handling steel material of this sort, using only approved tools and hoists that are required for safe erection of this product.

2.1.2 | Fasten a chain or sling through both lifting eyes; secure it to the lift equipment and lift the collector. Make sure the sling and lifting equipment are rated for the weight of the collector and that the operator is trained in handling the equipment. The collector weighs approximately 500 lbs.

2.2 Positioning Dust Collector

2.2.1 | Figure 2 shows typical arrangements and call outs when the dust collector is connected to a blast cabinet reclaimer. **NOTE:** The collector may also connect to a 900 cfm reclaimer mounted on a blast machine used with a small pneumatic recovery system, as shown in the M-Section® Sweep-In Recovery Owner's Manual, stock no. 23647.

2.2.2 | Figure 3 is a typical arrangement with a LPDC 600 connected to an AWAC abrasive cleaner used with mechanical recovery systems. The dust collector provides air movement for the AWAC air wash to remove fines (abrasive worn too fine for blasting purposes) from recyclable abrasive.

2.2.3 | Position the collector in a convenient location that complies with OSHA and local safety codes. Provide ample space at the front to open the door to access and replace the cartridge, and to remove the dust container.

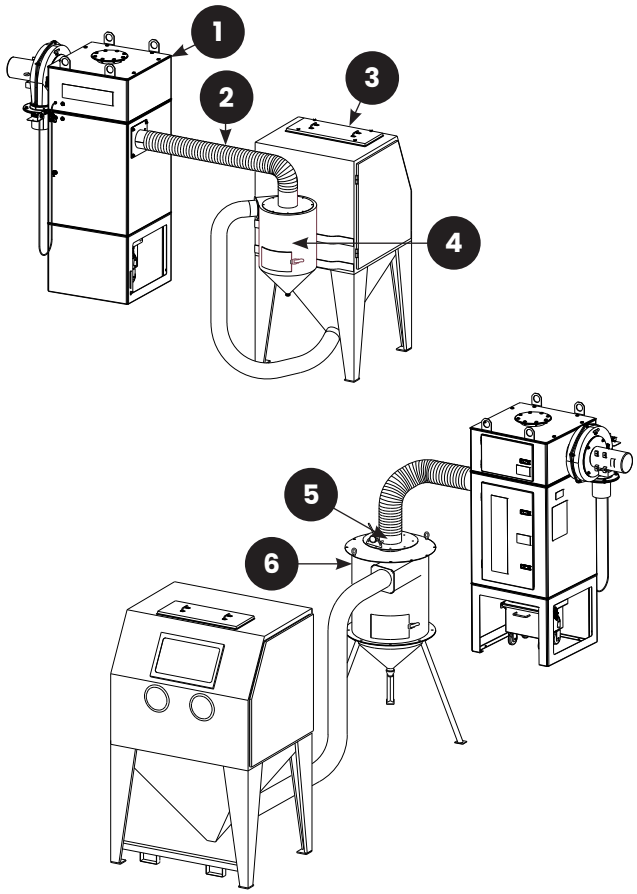

FIGURE 2: (1) LPDC Dust Collector; (2) Flexhose; (3) Cabinet; (4) Cabinet Mounted Reclaimer; (5) Optional Adjustable Vortex; (6) Free-standing Reclaimer

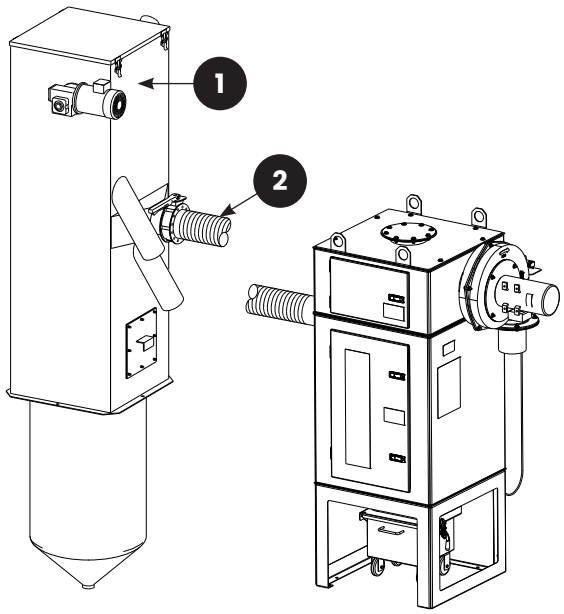

FIGURE 3: (1) AWAC Abrasive Cleaner; (2) Dust Connection

2.2.4 | Recheck orientation of the dust collector, blast cabinet and reclaimer, or other equipment the collector is servicing. When satisfied that all are correctly positioned, anchor the collector to the floor. **NOTE:** If there is any doubt about the final positioning of the dust collector, do not remove the lifting equipment until the collector is fully assembled, connected to the mating, equipment, and ready to be anchored.

2.2.5 | After the collector is firmly anchored, remove the lifting chain/sling.

2.3 Flex Hose Connections

Removing the wire from the first two or three inches of hose eases installation and creates a tighter seal. Use care not to damage the hose. Secure the hose with worm clamps. The hose wire helps dissipate static in the conveying hose and helps ground each segment. In order for the hose wire to dissipate static electricity, the wire must touch the metal of each segment.

2.3.1 | Refer to **Figure 2** when connecting flex hose to a reclaimer or **Figure 3** and when connecting to an AWAC abrasive cleaner, and connect the hose between the reclaimer or AWAC outlet and dust collector inlet pipe.

2.3.2 | Cut the hose to length to provide a connection loose enough to avoid stretching the hose, but taut enough to prevent excessive sagging. Support the hose if needed.

2.4 Ground Dust Collector

2.4.1 | To prevent static electricity build up, attach an external grounded wire from an earth ground to the grounding lug located on the dust collector leg.

2.5 Connect Compressed-Air Supply

Figure 4, for maximum filter life and efficiency, the pulse air source should be 30% relative humidity or less, and be free of any oil contaminants. If line air does not meet this requirement, an air dryer is recommended.

⚠ WARNING

Failure to observe the following before connecting the equipment to the compressed-air source can cause serious injury or death from the sudden release of compressed air.
- **Lockout and tagout the compressed-air supply.**
- **Bleed the compressed-air-supply line.**

2.5.1 | Connect a 1/4-NPT air fitting, that is compatible with the air-supply hose (refer to Paragraph 2.5.2), to the fitting on the pulse-pressure regulator. Note that the style of connections shown in **Figure 4** is for reference only.

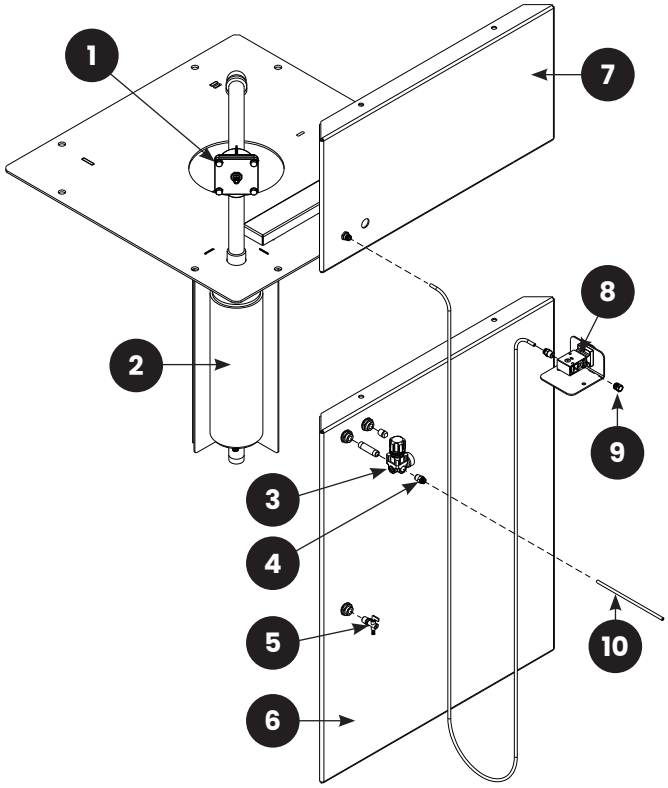

FIGURE 4: (1) Pulse Valve; (2) Pulse Reservoir; (3) 1/4 NPT Regulator; (4) 1/4 NPT Push-to-Connect; (5) Pulse Drain Valve; (6) LPDC Body Panel; (7) LPDC Clean Air Box Panel; (8) Manual Pulse Button; (9) 1/4 NPT Muffler; (10) 1/4 Air Supply Line

2.5.2 | Install an isolation valve at the compressed-air source to enable depressurization for service. Connect a 1/4" ID or larger air line from the air source to the fitting mounted on the pressure regulator. A smaller diameter hose may delay full pressure recovery time when doing multiple pulses.

2.6 Electrical Service

2.6.1 | Electrical Installation Notes

⚠ WARNING

Shorting electrical components can result in serious electrical shocks or equipment damage. Electrical power must be locked out and tagged out before performing any electrical work. All electrical work or any work done inside a control panel or junction box must be performed by a qualified electrician, and comply with applicable codes.

All wiring is to be provided by the user, and it is to comply with applicable electrical codes.

Electrical requirements depend on the size and phase of the motor. Standard dust collectors are supplied as follows:

- 300 cfm, 1/2 HP, 115/208-230 V, 1 PH, 60 HZ FLA 115/7, 208/3.4, 230/3.5.
- 600 cfm, 1 HP, 115/208-230 V, 1 PH, 60 HZ FLA 115/12, 208/6.6, 230/6.2.
- 900 cfm, 2 HP, 208-230/460 V, 3 PH, 60 HZ FLA 208/5.2, 230/4.8, 460/2.4.

2.6.2 | Single-Phase Wiring for Blast Cabinets

2.6.2.1 | Refer to the wiring schematic in **Figure 5**. Wire the dust collector motor per instruction on the motor data plate to the junction box mounted on the cabinet. When wired as noted in **Figure 5**, the exhauster motor will start when the cabinet light switch is turned ON and stop when the switch is turned OFF.

2.6.3 | Three-Phase Wiring for Blast Cabinet

2.6.3.1 | Refer to the wiring schematic stowed inside the control panel mounted on the cabinet. Wire from the user's disconnect to the panel and from the panel to the dust collector motor per instruction on the motor data plate.

2.6.4 | Three-Phase Wiring for Recovery System

2.6.4.1 | If dust collector is equipped with a control panel (panels are generally not included unless ordered as a separate item), a wiring schematic is stowed inside the panel. Wire from the user's disconnect to the panel and from the panel to the dust collector motor per instruction on the motor data plate.

2.6.4.2 | If a panel is not included, wire the motor as noted on the motor data plate using a user-supplied control panel. The collector motor should be wired to start in series with other system motors. Generally, the dust collector should start before other system components.

2.7 Check Motor Rotation

2.7.1 | After wiring is completed, observe the following warning and check the motor rotation. To check rotation, jog the starter (momentarily turn switch ON and OFF). This causes the motor to rotate slowly. Look through the slots in the motor fan housing where rotation of the fan can easily be observed. Proper rotation is indicated by the arrow on the exhauster housing; the fan should rotate toward the exhauster outlet as shown in **Figure 6**.

⚠ WARNING

Do not look into the exhauster outlet while the paddle wheel is turning. Injury to the eye or face can occur from objects being ejected from the exhauster.

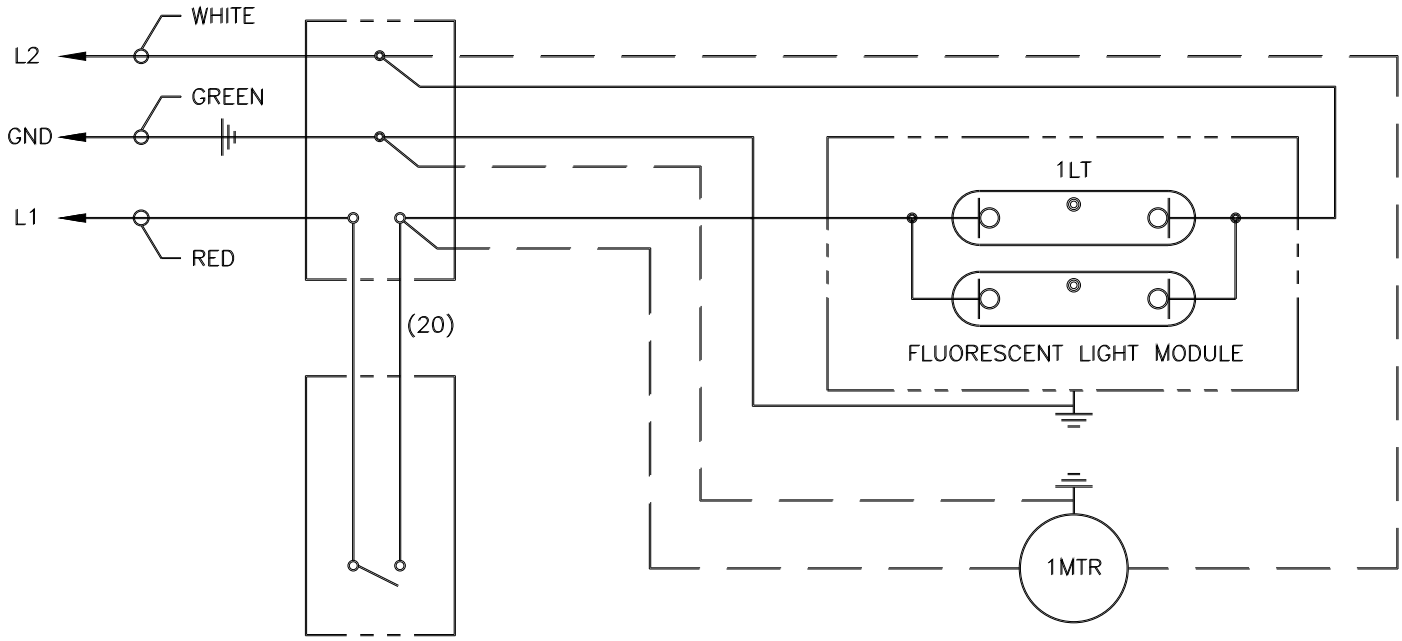

115V — 1PH — 60HZ Power Supply with Plug

Blower Motor (1MTR) Located on Dust Collector

FIGURE 5

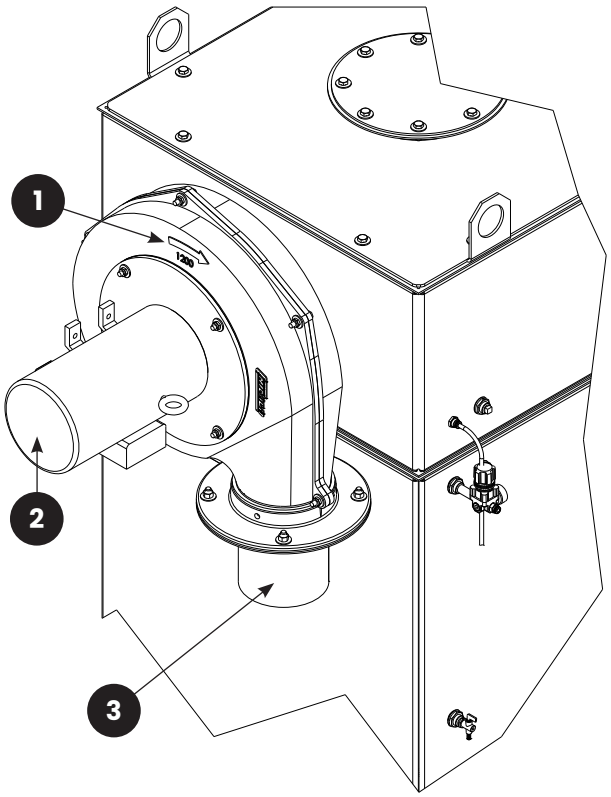

FIGURE 6: (1) Rotation Arrow (2) Observe rotation through back of exhauster motor. (3)Do not look into the exhauster outlet.

NOTE: Fan should rotate toward the exhauster outlet.

2.8 Install/Change Filter Cartridge — Figure 7

NOTE: The filter cartridge is shipped loose to avoid damage during transportation.

⚠ WARNING

Fall Hazard: Follow OSHA Regulations in 29CFR1910 Subpart D and F for fall protection when working above 4 feet.

2.8.1 | Open the filter access door using the two latches *(see picture 1a and 1b)*

2.8.2 | Locate the tab on the Filter Mounting Bar *(see picture 2)*

2.8.3 | Push tab up slightly, approximately 1/2 in, and pull forward about 1/2 in.

2.8.4 | Slowly lower Filter Mounting Bar *(see picture 3)*. Do not release the bar suddenly, as the filter may drop quickly, potentially causing injury. Lower bar fully.

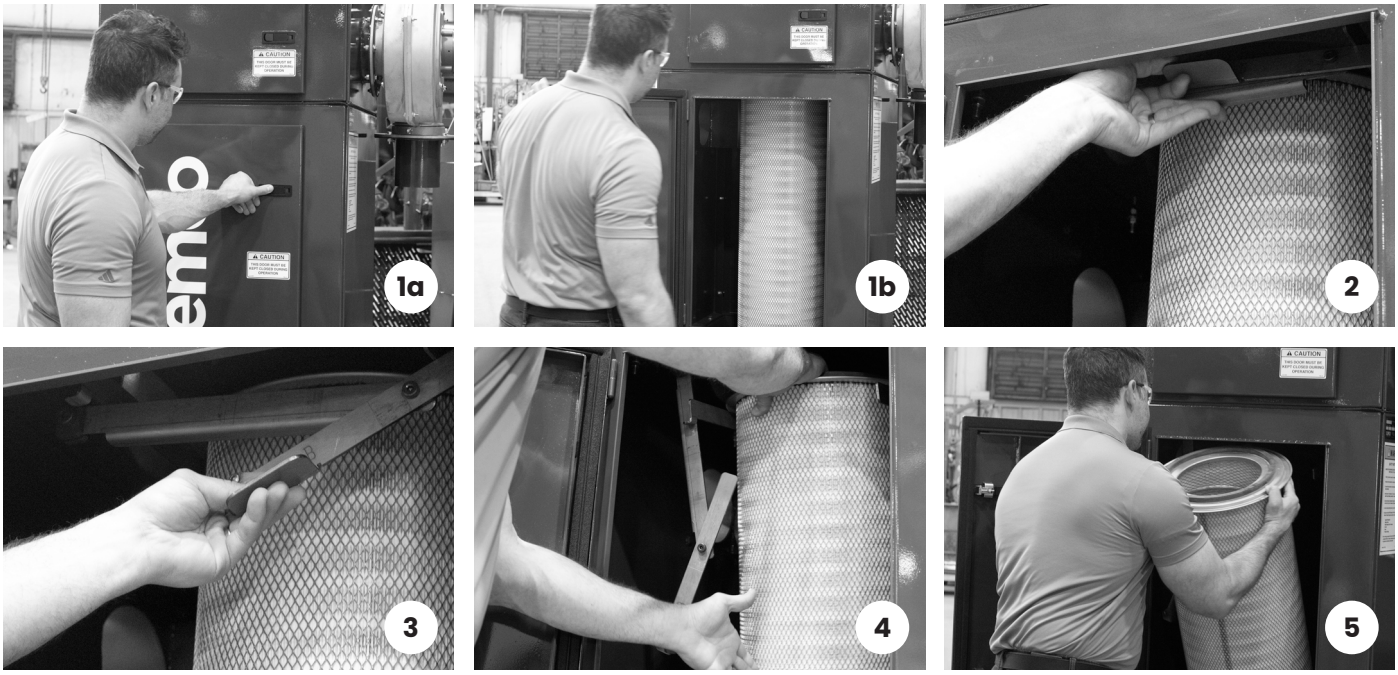

FIGURE 7

2.8.5 | With the Filter Mounting Bar removed, slide filter cartridge out of the Filter Cartridge Holding Bracket *(see picture 4)*.

2.8.6 | Dispose of used filter cartridge.

⚠ WARNING

When disposing of the filter cartridge, avoid inhaling dust particles, as they may contain harmful contaminants. Wear appropriate respiratory protection and handle the filter carefully to minimize dust exposure. Dispose of the cartridge in accordance with local regulations for hazardous or particulate waste. It is the customer and users' responsibility to be aware of the potential hazards associated with the dust generated by the abrasive blasting operation. Inhalation of hazardous dust can cause serious injury, including death.

2.8.7 | Install new filter cartridge. Slide new cartridge onto Filter Cartridge Holding Bracket. Make sure filter is pushed all the way to the back of the bracket.

2.8.8 | With one hand, lift the Filter Cartridge Holding Bracket so that the filter is approximately vertical in position.

2.8.9 | Reinstall the Filter Mounting Bar, securing the Filter Cartridge Holding Bracket in place. *(see picture 5)*

2.8.10 | Visually verify that the filter gasket is compressed and fully sealed.

2.8.11 | Close filter access door and relatch.

2.8.12 | Follow Filter seasoning instruction in Section 7.2

3.0 Operation

⚠ WARNING

Everyone operating and servicing this equipment must be made aware of the hazards associated with abrasive blasting; including handling toxic materials such as lead and dust. Toxicity and health risks vary with the type of media used and dust generated by blasting. Identify all material being removed by blasting, and obtain a Safety Data Sheet (SDS) for the blast media.

⚠ NOTICE

The dust collector access cover, dust container cover, and flex hose must be secure when the dust collector is in operation.

3.1 Initial Startup

3.1.1 | Pressurize the air supply line to the pulse regulator and check all pneumatic connections for leaks.

3.1.2 | Turn pulse pressure to 20 psi (refer to Section 5.1 to adjust pressure), then refer to **Figure 8** and press and release the manual pulse-valve plunger; (press and release foot pedal with foot-pedal pulse option). The collector should pulse every time the plunger is momentarily pressed. NOTE: Do not hold the plunger in; holding the plunger in for more than a moment will not increase cleaning efficiency. Prolonged pressure on the plunger could cause dust leaks and needlessly consume compressed air.

3.1.3 | After the operation is checked, adjust pulse pressure to 0 psi until the cartridge is seasoned per Section 7.2.

3.2 Operational Startup

3.2.1 | Make sure the dust container is secure.

⚠ NOTICE

Do not pulse a new dust collector or replacement cartridge until the cartridge is properly seasoned per Section 7.2. Pulsing unseasoned cartridges can cause premature cartridge failure and decrease the efficiency of dust collector.

3.2.2 | Pressurize the pulse reservoir and check reservoir pressure. Refer to Section 5.1 to adjust pressure.

3.2.3 | Switch ON the lights and exhauster. If wired according to the cabinet schematic, the ON/OFF switch located on the cabinet performs both functions.

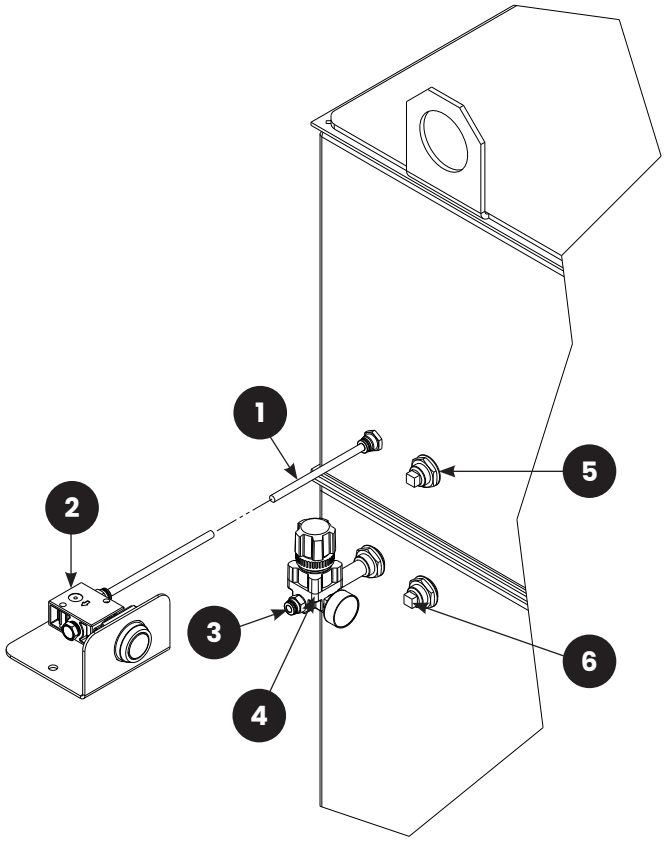

FIGURE 8: (1) Remote Mount Pulse Button; (2) Diaphragm Valve; (3) Pulse Air Supply; (4) Pulse Pressure Regulator; (5) Optional Clean Air Differential Pressure Port; (6) Optional Dirty Air Differential Pressure Port

3.3 Pulsing (Cleaning) Dust Collector Cartridge

Refer to Section 4.3 for optional foot-pedal pulsing.

3.3.1 | The filter cartridge pulses each time the manual pulse-valve plunger is pressed; refer to **Figure 8**. With the exhauster running, quickly press and release the plunger on the pulse valve. Several pulses may be needed to clean the cartridge; wait about five seconds between pulses. Rapid repetitive pulsing may cause dust leakage.

3.3.2 | If the collector is used with a blast cabinet, begin pulsing the cartridge at least every half hour of blasting. If the collector is used with an AWAC, pulse every four hours and before turning OFF the exhauster. Dusty blasting conditions will require more frequent pulsing. As the dust cake on the cartridge increases, more frequent pulsing is required.

The foot-pedal pulse option pulses the cartridge each time the pedal is pressed and when released. The optional auto-pulse kit automatically pulses the cartridge at timed intervals. Refer to Section 9.2, Field-Installed Accessories.

3.4 Shutdown

3.4.1 | Allow the collector exhauster to run until all system components are cleared or empty (refer to the accessory components manual) and all ventilated areas are free of airborne dust.

3.4.2 | Turn off the exhauster.

3.4.3 | Shut off the pulse-regulator air supply.

3.4.4 | Drain the pulse reservoir. The drain valve is mounted at the bottom of the reservoir, as shown in **Figure 9**. Drain whenever the air supply to the pulse regulator is turned off.

3.4.5 | Empty dust container when it is no more than half-full. Refer to Section 6.1.

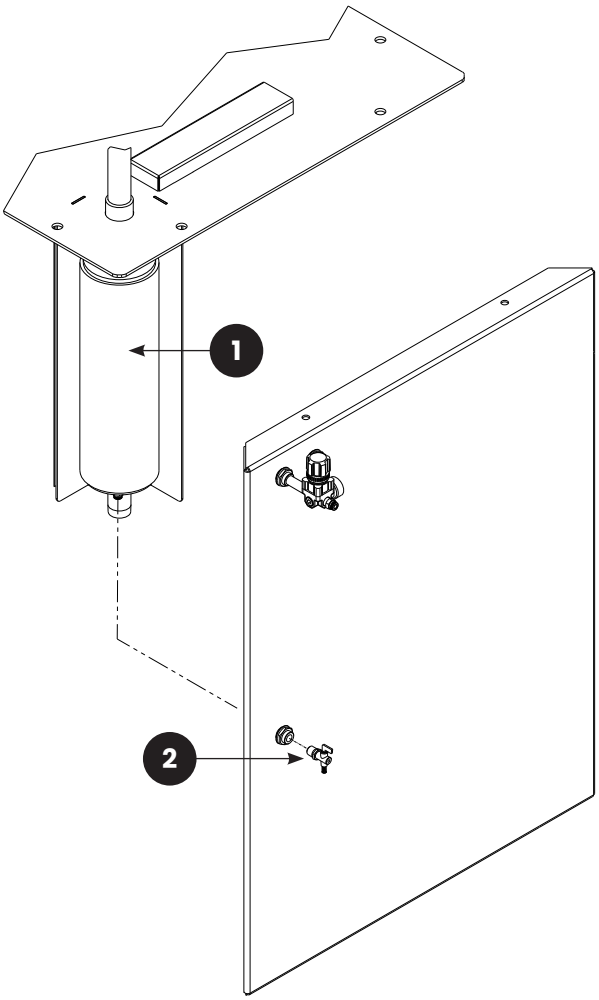

FIGURE 9: (1) Pulse Reservoir; (2) Drain Valve

4.0 Field-Installed Options

4.1 | Floor Standing HEPA Filter — Figure 10

4.1.1 | Place the HEPA enclosure at a convenient location next to the collector. Make sure there is room to remove the enclosure top, access the HEPA filter element, and to remove the dust-collector dust container.

4.1.2 | Slide one end of the flex hose over the exhauster outlet and secure it with one of the provided hose clamps.

4.1.3 | Slide the other end of the flex hose over the pipe on the HEPA enclosure (shorten the flex hose as needed) and secure with a clamp.

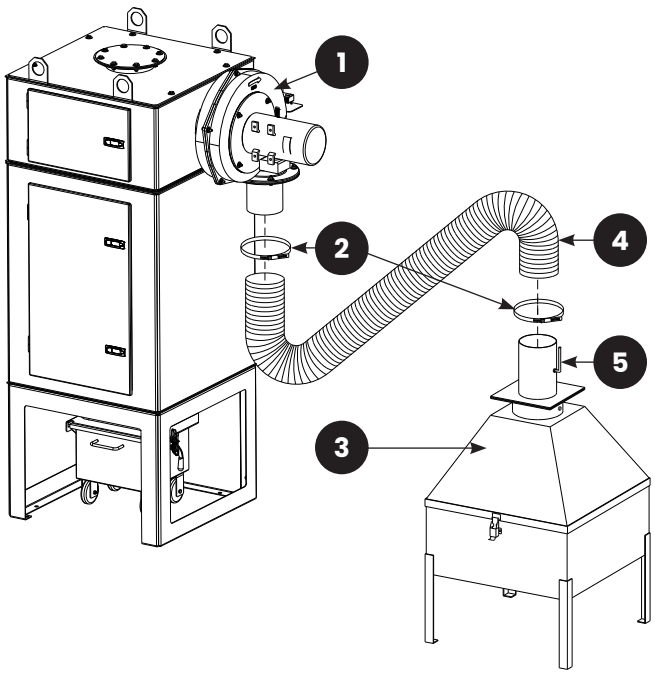

FIGURE 10: (1) Exhauster; (2) Hose Clamp; (3) HEPA Enclosure; (4) Flex Hose; (5) Damper

4.2 | Differential-Pressure Gauge Kit — Figure 16

The differential-pressure gauge measures pressure drop across the filter cartridge. The gauge is the best way to monitor cleaning efficiency and dust buildup on the cartridge.

4.2.1 | The gauge panel, gauge, filter, and panel fittings come fully assembled. The bushings, snubber fittings, and tubing are loose. Mount the panel on the cabinet, dust collector, or at a location where it can be easily monitored. The kit includes 20 feet of tubing, allowing the panel to be mounted within 10 feet of the dust collector connections, as shown in **Figure 11**.

4.2.2 | Mounting holes are located on left side and at the bottom of the gauge panel. After selecting the location, match drill holes, and use nuts and cap screws to secure the panel. Make sure the panel is close enough to the dust collector for 10 feet of tubing to reach.

4.2.3 | Remove 1/4" pipe plugs from the dust

FIGURE 11

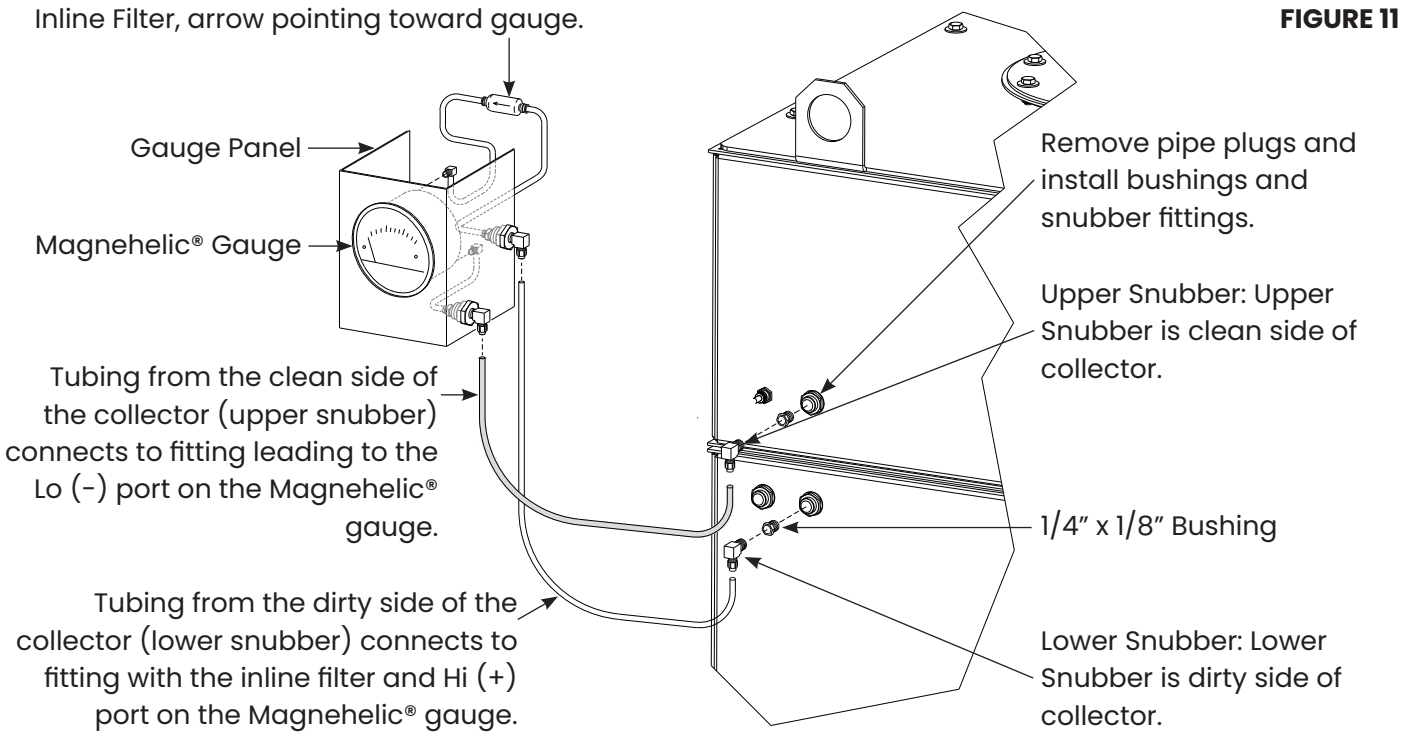

collector body and install 1/4" x 1/8" bushings and snubber fittings as shown in **Figure 11**.

4.2.4 | Remove the snubber-fitting compression nut, slide it over the one end of the 1/4" tubing, insert the tubing into the fitting, and tighten the compression nut to secure.

4.2.5 | Cut the tubing to length and connect the other end to the fittings and gauge panel as shown in **Figure 11**. Make sure the tubing ends are connected to the correct fitting, as shown in the illustration.

4.2.6 | Refer to the Magnehelic® differential-pressure gauge manual provided for operation of the gauge. Magnehelic® is a registered trademark of Dwyer Instruments, Inc.

4.3 CDC Foot-Pedal Pulse Kit

NOTE: If the foot-pedal pulse option was factory installed, proceed to Paragraph 4.3.8 to connect the foot-pedal tubing to the dust collector.

4.3.1 | With the installation of the foot-pedal pulse kit to a user's existing BNP foot pedal, the filter cartridge is automatically pulse cleaned each time the foot pedal is pressed and again when it is released.

4.3.2 | Components of the assembled kit are shown in **Figure 12**.

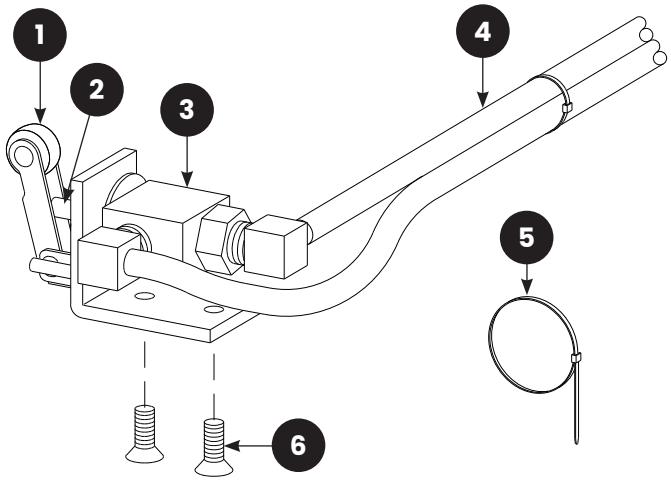

FIGURE 12: (1) Cam Follower; (2) Pulse-Valve Plunger; (3) Pulse Valve; (4)Mounting Screws; (5) Urethane Tubing; (6) Loose Wire Tie-2

4.3.3 | Refer to **Figure 13** and feed the urethane tubing through the foot pedal from the front toward the back and above the top hinge pin.

4.3.4 | Place the mount bracket over the slot in the foot-pedal base and loosely install the screws through the slot and into the threaded holes in the bracket.

4.3.5 | Refer to the illustrations in **Figure 14** and slide the pulse assembly as needed so the cam follower is off the lobe when the pedal is up, on the lobe when the pedal is partially pressed, and off the lobe when the pedal is fully pressed. Tighten the screws to prevent movement.

4.3.6 | Use one of the loose wire ties to strap the pulse-valve tubing and foot-pedal tubing together.

4.3.7 | Refer to **Figure 15** and pull or pry the manual pulse-valve tubing from the barb fittings on the pulse-valve actuator and inlet tee.

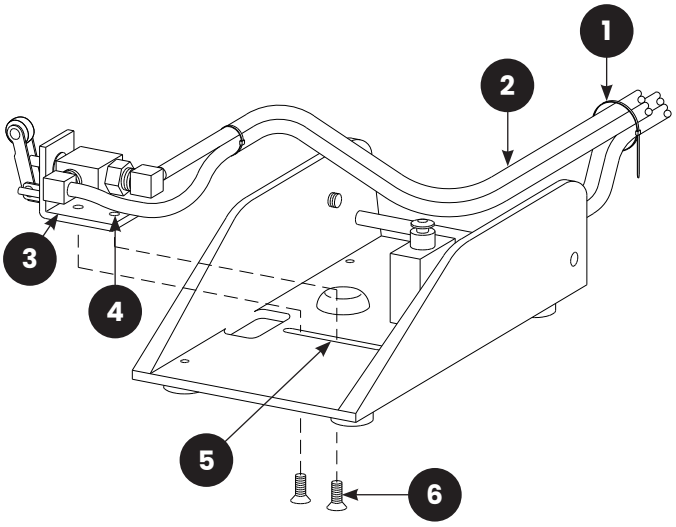

FIGURE 13: (1) Wire tie tubing together; (2) Feed tubing through foot pedal; (3) Mounting Bracket; (4) Screw Holes; (5) Mounting Slot; (6) Mounting Screws

NOTE: Foot pedal shown without top and spring for clarity.

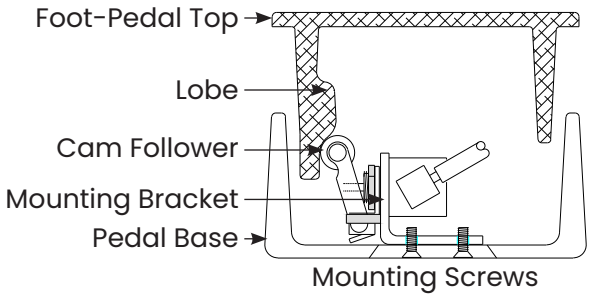

Foot Pedal Top Up
(nonblast position)

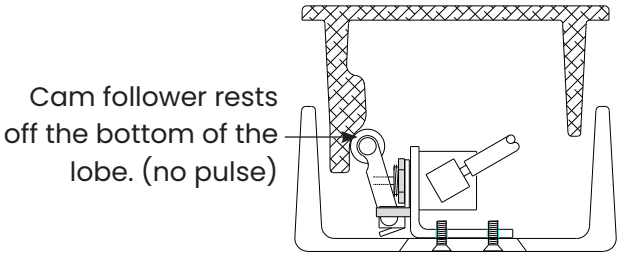

Pedal Top Partially Pressed Down

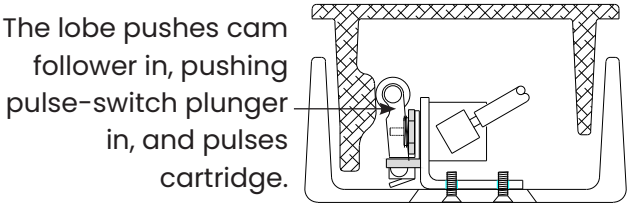

Foot Pedal Top Fully Pressed Down
(blast position)

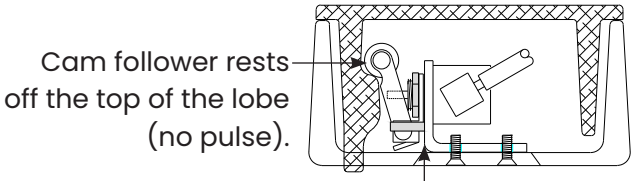

Slide bracket as necessary to pulse when the cam follower is on the lobe and not pulse when follower is off the lobe. (When correctly adjusted, there should be a very small amount of free play between the cam follower and pulse-valve plunger.) Tighten screws to secure.

FIGURE 14

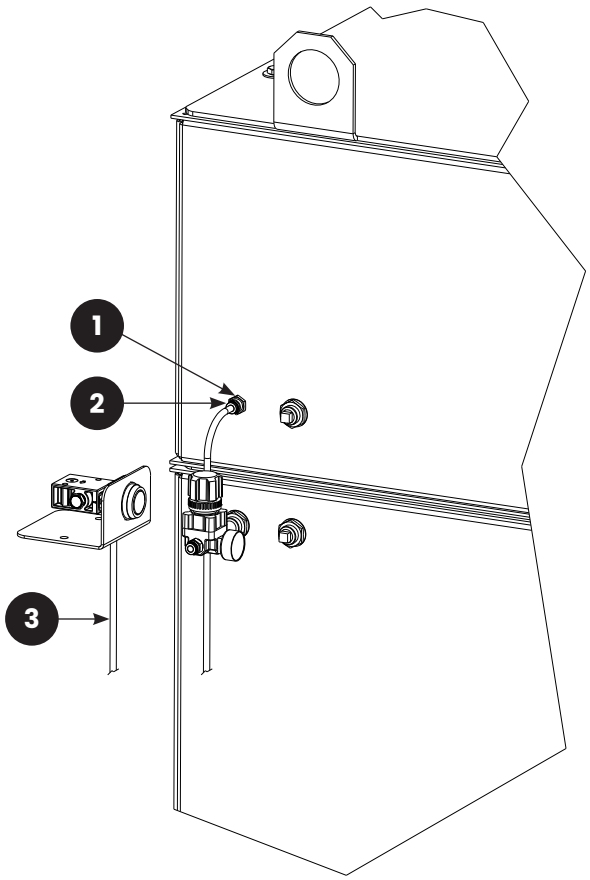

FIGURE 15: (1) Bulkhead Fitting, to Diaphragm Pulse Valve; (2) Remove Push-to-Connect Tubing Fitting; (3) Remove Tubing, Pulse Button and Mount

4.3.8 | Refer to **Figure 16** and connect the foot-pedal pulse tubing.

1. Separate a few inches of the twinline tubing and push the outbound line (shown shaded for clarity) from the pulse valve IN port onto the barb fitting on the inlet tee.
2. Push the return line (shown unshaded) from the pulse valve OUT port onto the barb fitting on the actuator.
3. Use remaining wire tie to prevent further separation of the twinline tubing.

4.3.9 | Test the operation by pressing and releasing the foot pedal. The cartridge should pulse each time the foot pedal is pressed and again when it is released.

If it does not operate accordingly, review the adjustment process in Section 4.3.5.

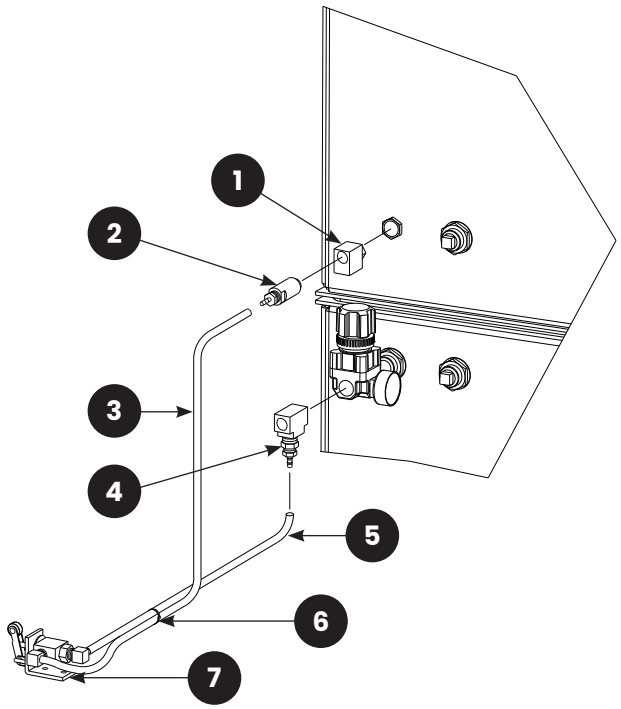

FIGURE 16: (1) 3-Way Pulse Valve with Plunger; (2) Pilot Actuator; (3) Return Line; (4) Inlet Tee with Hose Fitting; (5) Outbound Line; (6) Remaining Wire Tie; (7) Pulse Valve Assembly shown without foot pedal for clarity

4.4 Auto-Pulse Kit

4.4.1 | Refer to instructions provided with the pulse kit.

5.0 Adjustments

5.1 | Pulse Pressure

5.1.1 | The pressure regulator is located on the pulse reservoir inlet, as shown in **Figure 17**. After the cartridge is seasoned per Section 7.2, adjust pressure to 60 psi.

5.1.2 | To adjust pressure, pull the regulator knob out to unlock. Turn it clockwise to increase pressure or counterclockwise to decrease pressure. Once pressure is set, push the knob in to lock it and maintain the setting.

5.1.3 | As dust accumulates on the filter cartridge the dust cake thickens and reduces air flow,

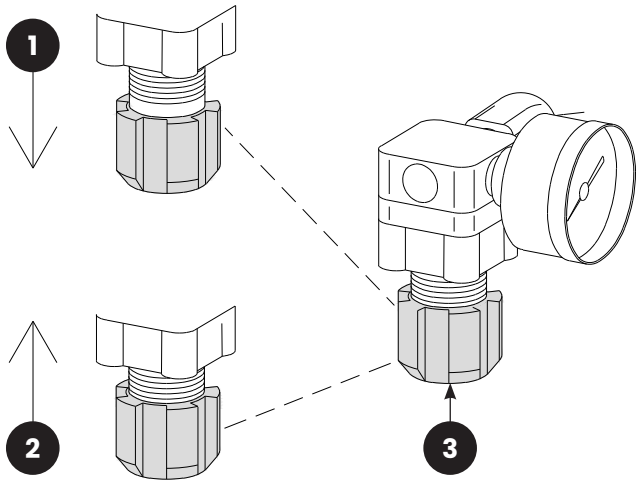

FIGURE 17: (1) Pull Knob to Unlock; (2) Push Knob to Lock; (3) Pressure Regulator Control Knob

— Some items removed or rotated for clarity.
— Turn knob clockwise to increase pressure.
— Turn knob counterclockwise to decrease pressure.

making it necessary to do additional pulsing. See Section 3.3 to remove excess dust.

5.1.4 | When pulsing alone does not adequately clean the cartridge, increase pulse pressure by 5-psi increments until the maximum of 90 psi is reached.

5.1.5 | When the maximum pulse pressure of 90 psi is attained but pulsing as described in Section 3.3 does not increase visibility or lower differential pressure below 4" water column (W.C.), replace the cartridge per Section 7.1.

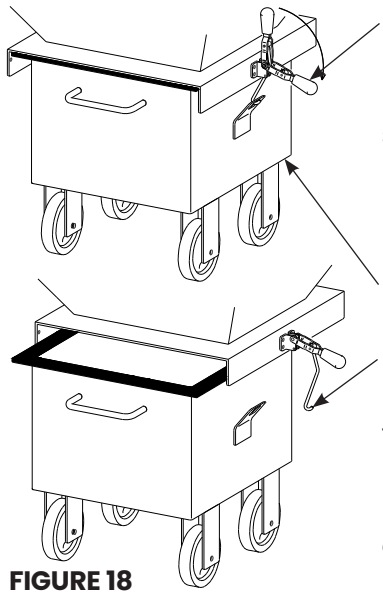

Latch Handle
Pull down the latch handles on both sides of the dustbin to lower the bin and loosen the hooks.

Dustbin

Latch Hook
Undo the latch hook from the latch bracket and roll the bin from under the dust collector.

FIGURE 18

6.0 Daily Preventive Maintenance

⚠ WARNING

Prior to doing any maintenance or opening the dust collector, the employer must meet OSHA standards required but not limited to 29CFR 1910 for:

- **Appropriate Respirator**
- **Protective Clothing**
- **Toxic and Hazardous Substances**
- **Fall Protection**

Toxicity and health risk vary with type of dust generated by blasting. Identify all material that is being removed by blasting and obtain a Safety Data Sheet (SDS) for the blast media. Waste dust in the collector can cause serious injury or death through inhalation, absorption, or consumption. The employer shall meet all OSHA requirements including those for: confined space, combustible dust, fall protection, and hazard communication.

⚠ WARNING

Make sure the following conditions are met before performing any maintenance on the collector:

- **Turn off compressed-air supply and drain air from pulse reservoir.**

Failure to observe the above warnings can result in serious injury from the sudden release of trapped compressed air.

6.1 Inspect and Empty Dust Container

6.1.1 | Empty the dust containers regularly. Start by checking the containers at least daily and when adding media, then adjust frequency based on usage, contamination, and friability of the media.

⚠ NOTICE

Inspect dust level in the dust container each time the collector is shut off and when adding new media to the cabinet. Empty the dust container when it is no more than half-full. Failure to monitor the dust level will overfill the collector and cause spillage, requiring extensive cleaning while wearing approved respirator and personal protection.

6.1.2 | Turn off the exhauster and unlatch the bin from the dust collector, as shown in **Figure 18**.

6.1.3 | Roll the bin from under the dust collector, tie off the dust bag, and place it into a suitable disposal receptacle.

NOTE: Placing a suitable dust bag in the dustbin makes it easier to contain and empty dust. The bag must not interfere with the bin interlock switch.

6.1.4 | Roll the bin under the dust collector, making sure the interlock switch clears the top of the bin as it is moved into place.

⚠ NOTICE

Make sure the dustbin interlock switch clears the top of the bin when the bin slides under it and that the bin engages the switch when it is raised and latched into place. Refer to Section 0.0 to adjust the bin interlock switch.

6.1.5 | Clip both latch hooks into the latch brackets and raise both latch handles to raise the bin, and latch it in place.

6.2 Check Exhaust Air for Dust

6.2.1 | Dust discharge at the exhauster indicates a leaking or damaged filter cartridge that must be checked immediately. Note that a small amount of dust egress is normal for a short time when the cartridge is new before it is seasoned.

6.3 Cartridge Pulsing

6.3.1 | Pulse the cartridge at least every half hour of cabinet blasting and before turning OFF the exhauster as noted in Section 3.3. Dusty blasting conditions and dust loading on the cartridge will require more frequent pulsing.

7.0 Service Maintenance

⚠ WARNING

Prior to doing any maintenance or opening the dust collector, the employer must meet OSHA standards required but not limited to 29CFR 1910 for:

- **Appropriate Respirator**
- **Protective Clothing**
- **Toxic and Hazardous Substances**
- **Fall Protection**

Toxicity and health risk vary with type of dust generated by blasting. Identify all material that is being removed by blasting and obtain a Safety Data Sheet (SDS) for the blast media. Waste dust in the collector can cause serious injury or death through inhalation, absorption, or consumption. The employer shall meet all OSHA requirements including those for: confined space, combustible dust, fall protection, and hazard communication.

⚠ WARNING

Make sure the following conditions are met before performing any maintenance on the collector:

- **Turn off compressed-air supply and drain air from pulse reservoir.**

Failure to observe the above warnings can result in serious injury from the sudden release of trapped compressed air.

7.1 Replacing Filter Cartridge

⚠ WARNING

NO DUST IS SAFE TO BREATHE.

The inhalation of airborne dust can cause injury and lead to serious respiratory illness and death. Always wear approved respiratory protection when servicing the dust collector, while handling filter bags and cartridges, and when emptying the dust container.

7.1.1 | Lockout and tagout the compressed-air supply and electrical power.

7.1.2 | Close the air-supply valve and bleed all air from the pulse reservoir.

7.1.3 | Empty the dust container.

NOTE: Refer to Section 2.8 for Reference

⚠ WARNING

Lifting Hazard: Dust cartridges may exceed 50 pounds when dirty. Follow good material and lifting practices when changing filters.

7.2 Seasoning Cartridge

7.2.1 | New cartridges must be seasoned before starting pulsing. Cartridge is seasoned by letting a layer of dust (dust cake) develop on the outer surface of the filter media. The dust cake protects the filter cartridge and enhances the filtering efficiency; it is the dust cake that actually does the filtering.

7.2.2 | Operate the cabinet without pulsing for about two hours or until visibility decreases, whichever comes first. At that time, turn the pulse regulator to 60 psi and begin pulsing as noted in Section 3.3. NOTE: For AWAC applications, operate the AWAC for about two days before pulsing.

8.0 Troubleshooting

⚠ WARNING

Shut down the collector immediately if dust discharges from the exhauster. Check the cartridge to make sure it is seated and not worn or damaged. Prolonged breathing of abrasive dust and blasting by-product dust can result in serious lung disease or death. Short term ingestion of toxic dust such as lead, poses an immediate danger to health. Identify all materials to be removed by blasting, and obtain a safety data sheet (SDS) for the blast media.

8.1 | Collector Not Pulsing

8.1.1 | Check the pulse-pressure gauge. If pressure is low, check the compressed-air supply; look for leaks or a closed supply valve.

8.1.2 | Check function of the pulse-pressure regulator located on the pulse-reservoir inlet; make sure it has not been turned down or turned off.

8.1.3 | The 3-way manual pulse valve (also applies to foot-pedal pulse valve) may be faulty. No air should escape from the valve when the plunger is not pressed; a short burst of air should escape from the plunger when it is pressed. If it does not function accordingly, replace the valve.

8.2 | Pulse is Steady Stream of Air Instead of Quick Pulse

8.2.1 | The pulse valve diaphragm may be damaged. Continuous air flow into the dust collector typically means the diaphragm is leaking; remove the four cap screws on the diaphragm pulse valve and inspect the diaphragm. If damaged, replace it.

8.2.2 | The 3-way pulse valve may be stuck in pulse (plunger in) position: inspect 3-way pulse valve per Paragraph 8.1.3. Refer to the adjustment of the foot-pedal pulse assembly per Section 4.3.5.

8.3 | Exhauster Not Running

8.3.1 | Exhauster overload could be tripped. Have a qualified electrician reset and check for overload.

8.3.2 | Make sure that the main disconnect is in the ON position.

8.3.3 | Make sure there is electrical power to the motor. Have a qualified electrician check for electrical malfunction.

8.3.4 | Motor faulty. Have a qualified electrician check for electrical malfunction.

8.4 | Dust Discharges from Exhauster

8.4.1 | Check for loose or damaged filter cartridge.

8.4.2 | Filter cartridge not seasoned. Refer to Section 7.2.

This space intentionally left blank.

9.0 Replacement Parts

9.1 | Replacement Dust Collectors

9.1.1 | Dust collectors for cabinet use (12.5-ft. flex hose included)

- **300 cfm dust collector**
  —with 1/2 HP, 115-v/1/60 exhauster.....32019
- **600 cfm dust collector**
  —with 1 HP, 115-v, 1 PH, standard exhauster 32015
  —with 1 HP, 230/460-v/3/60 exhauster option 32013
- **900 cfm dust collector**
  —with 2 HP, 230/460-v/3/60 standard exhauster 31918

9.2 | Field-Installed Accessories

- HEPA Filter assembly, floor-standing
  Includes HEPA, flex hose, and clamps
  - 300 cfm 28974
  - 600 cfm 23625
  - 900 cfm 23626
- Differential-pressure gauge kit 23356
- Sound foam, adhesive-backed, per sq. ft.
  - 4 sq. ft. required, trim to fit 12484
- Auto-pulse kit, pulses at timed intervals 28936

- CDC Foot-Pedal Pulse Kit—pulses the cartridge each time the foot pedal is pressed and again when the pedal is released.

- Field installed pulse kit—includes fully assembled items shown in Figure 26, except as noted.....29480
- Factory installed pulse kit—includes items shown in Figure 26 fully assembly in BNP foot pedal 29481

Refer to Section 4.3 for installation instructions.

Foot-Pedal Pulse Kit Replacement Parts—Figure 19

(-) Foot-pedal pulse kit, field installed 29480
1. Cam follower 19576
2. Bracket, valve mount 22858
3. Spacer 19258
4. Valve, 3-way (pulse valve) 12202
5. Fitting, 1/8" NPT elbow x 1/8" barb 11733
6. Tubing, 1/8" ID twin urethane, per foot, 20 ft. standard length 19577
7. Roll pin, 1/8" 20479
8. Screw, 10-32 x 1/2" flat head 19571
9. Tie, nylon wire 12139

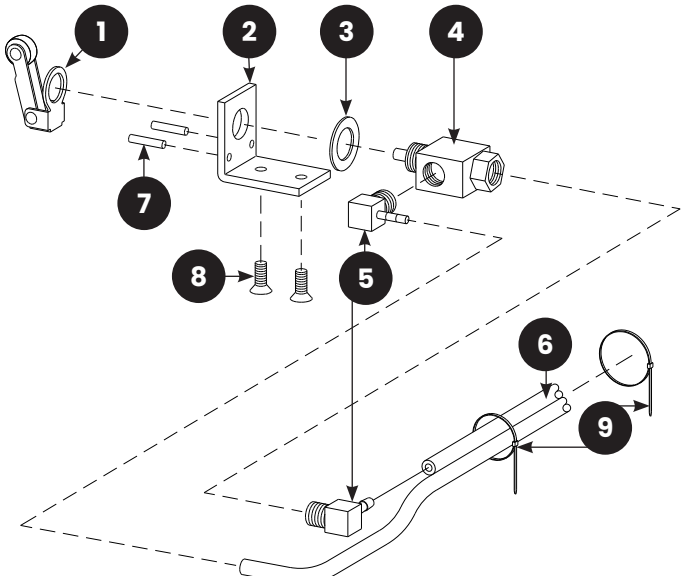

Figure 19: Items 1 through 7 and one Item 9 fully assembled. Items 8 and two Items 9 shipped loose for field installation.

9.3 | Exhauster Assembly

- Exhauster Assembly
  - 300 1Ph 32007
  - 600 1Ph 32005
  - 600 3Ph 32004
  - 900 3Ph 32003

9.4 | Inlet, Filter and Trash Bin Assembly — Figure 20

1. Hose, unlined flex, per foot, standard lengths are: 12.5-ft. with collectors
   - 5" ID for 300 cfm.....12449

- 6" ID for 600 cfm 12452
- 7" ID for 900 cfm 12448

2. Clamp, hose
   - 5-1/2" for 300 cfm 11578
   - 6-1/2" for 600 cfm 00750
   - 8-1/2" for 900 cfm 11576
3. Inlet adaptor
   - 5" OD for 300 cfm 31903
   - 6" OD for 600 cfm 31900
   - 7" OD for 900 cfm 31879
4. Gasket, inlet adaptor 11763
5. Gasket, 3/16 x 1.00, 3.5ft required 13089
6. Filter Cartridge, MERV 15 31862
7. Gasket, 5/8 x 1.75, 5ft required 23419
8. Dust Bin Assembly 28250

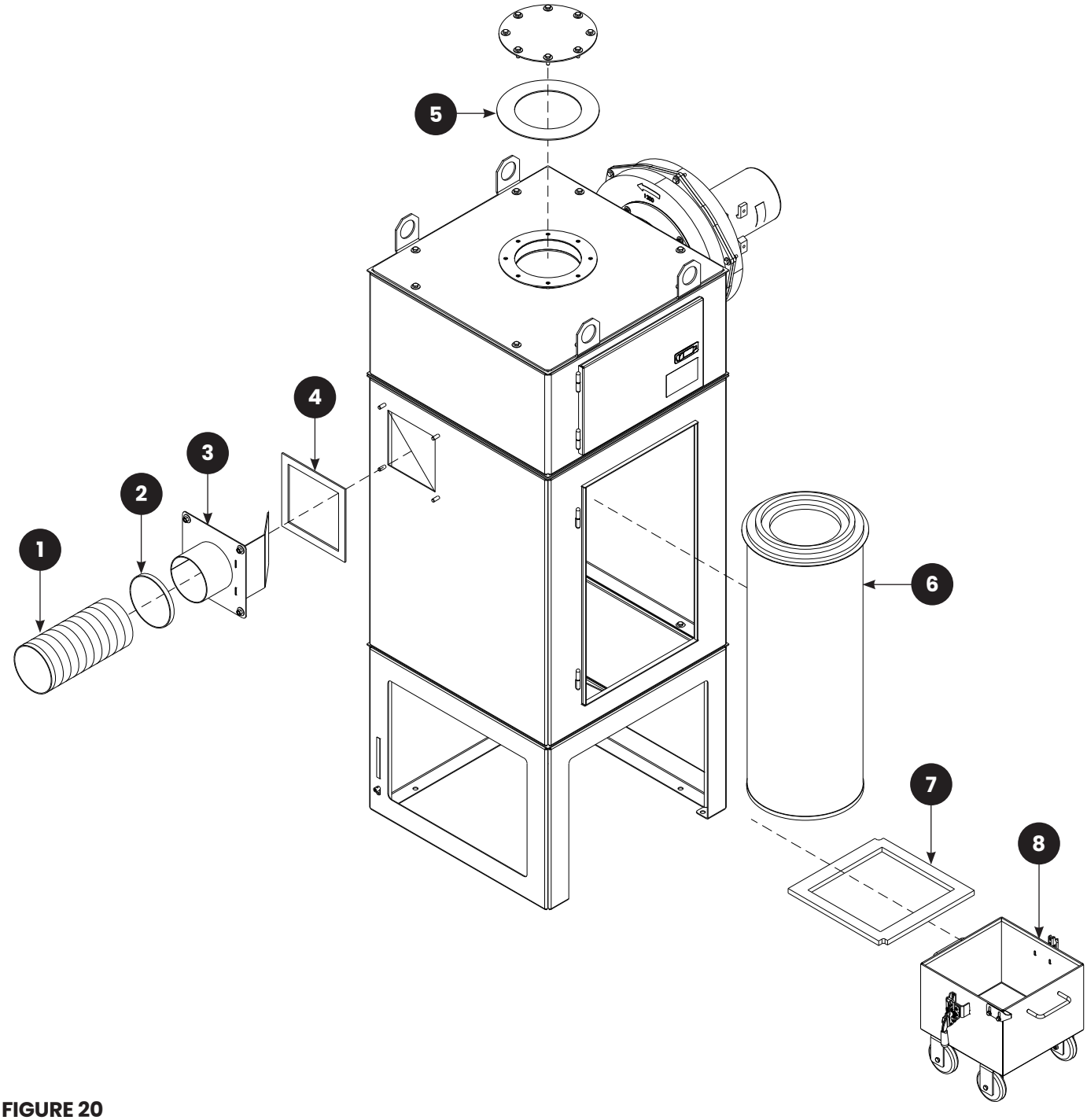

FIGURE 20

9.5 | Fan and Plumbing Assembly — Figure 21

1. Fan Extension 32008
2. Gasket, 1/8" x 2", 3ft required 13089
3. Exhauster
   - 300 cfm 1Ph 32007
   - 600 cfm 1Ph 32005
   - 600 cfm 3Ph 32004
   - 900 cfm 3Ph 32003
4. Gasket, 1/8" x 2", 3ft required 13089
5. Plug, 1/4NPT 01950
6. Pipe Nipple, 1/4NPT x 2" 01828
7. Regulator, 1/4NPT 12050
8. Fitting, 1/4NPT x 1/4 Push-to-Connect 11737
9. Petcock 1/4NPT 01993
10. Bulkhead Fitting, 1/4 Push-to-Connect 30320
11. 1/4" Poly Tubing, Orange 05615
12. Fitting, 1/4NPT x 1/4 Push-to-Connect 11737
13. Push Button Valve, 3-way 31994
14. Muffler, 1/4NPT 03988
15. Bracket, Pulse Button 31993

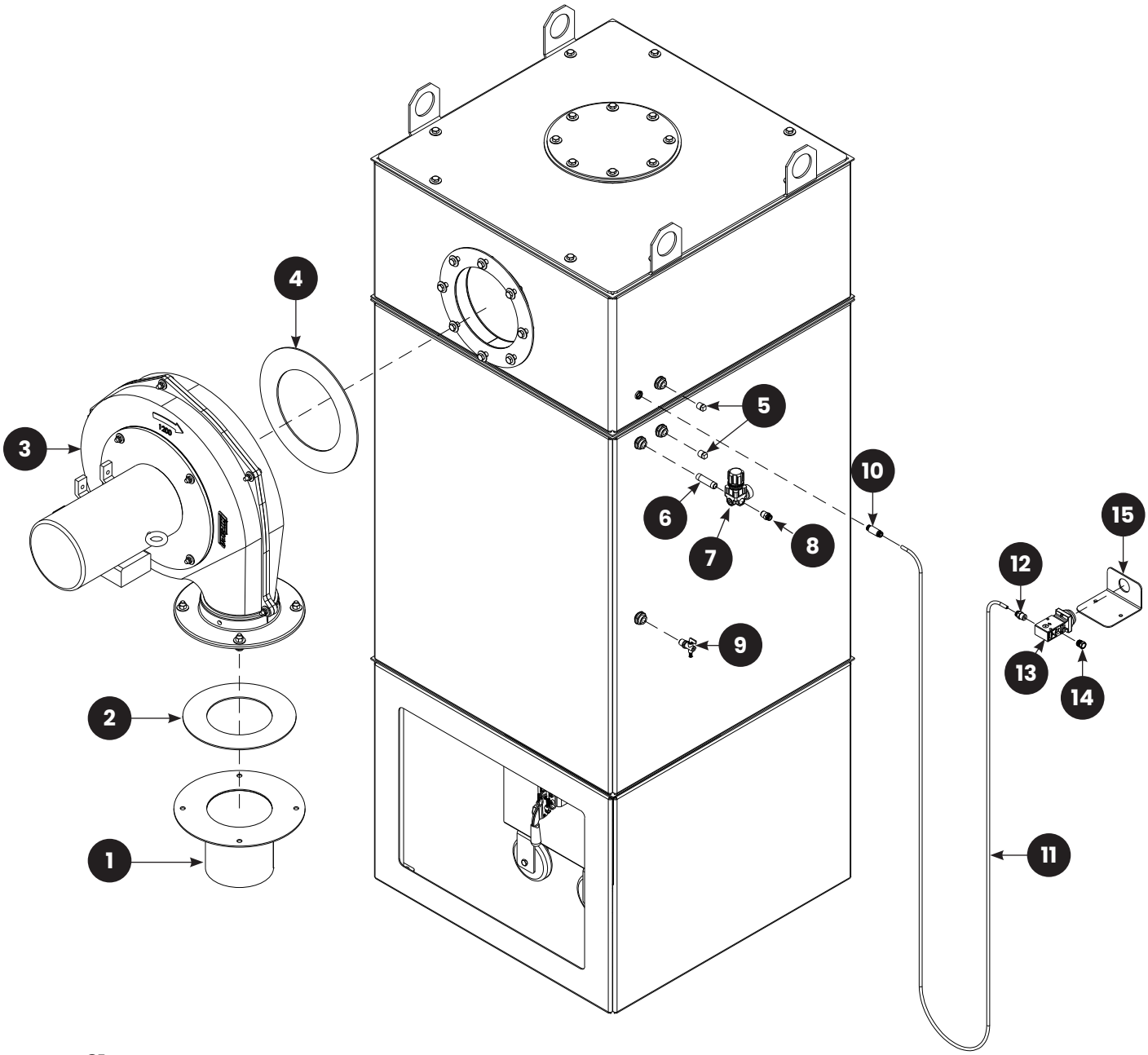

FIGURE 21

9.6 | Pulse Plumbing Assembly — Figure 22

1. 1/4" Poly Tubing, Orange 05615
2. Fitting, 1/4NPT x ¼ Push-to-Connect 11737
3. Valve, 1" Diaphragm pulse 30168
4. Pipe Nipple, 1" NPT x 7" 01707
5. Pipe Nipple, 1" NPT x 12" 01712
6. Elbow, 1" NPT 01768

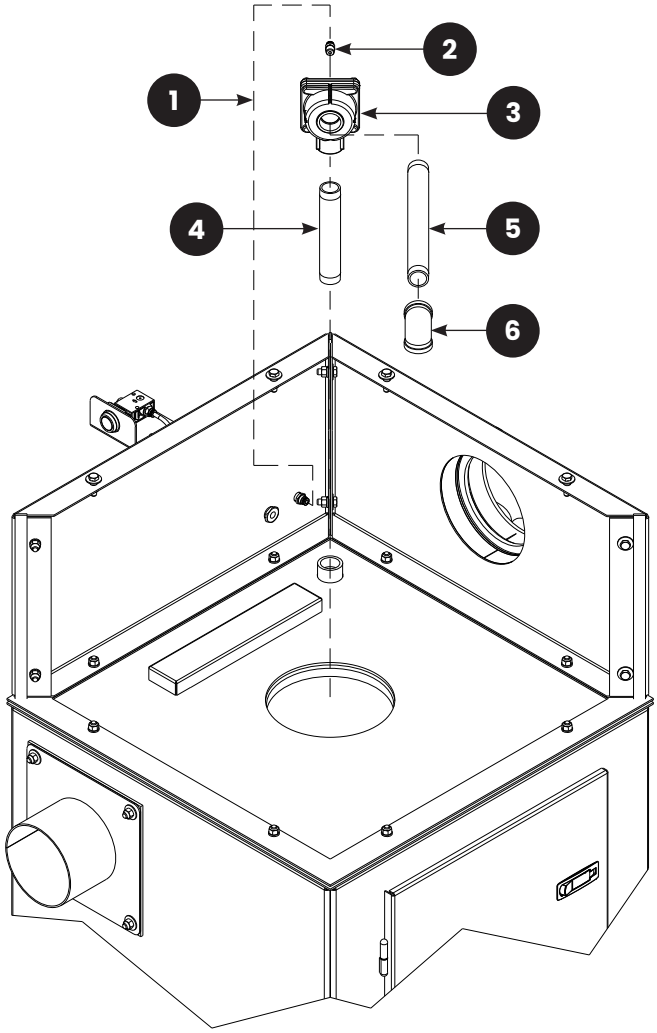

FIGURE 22

clemco

OPERATION MANUAL

OM 32011

©2025 Clemco Industries Corp.
One Cablecar Drive • Washington MO 63090
Phone: 636.239.4300
info@clemcoindustries.com • www.clemcoindustries.com
ALL RIGHTS RESERVED